SPARTAN SR

Front Assembly

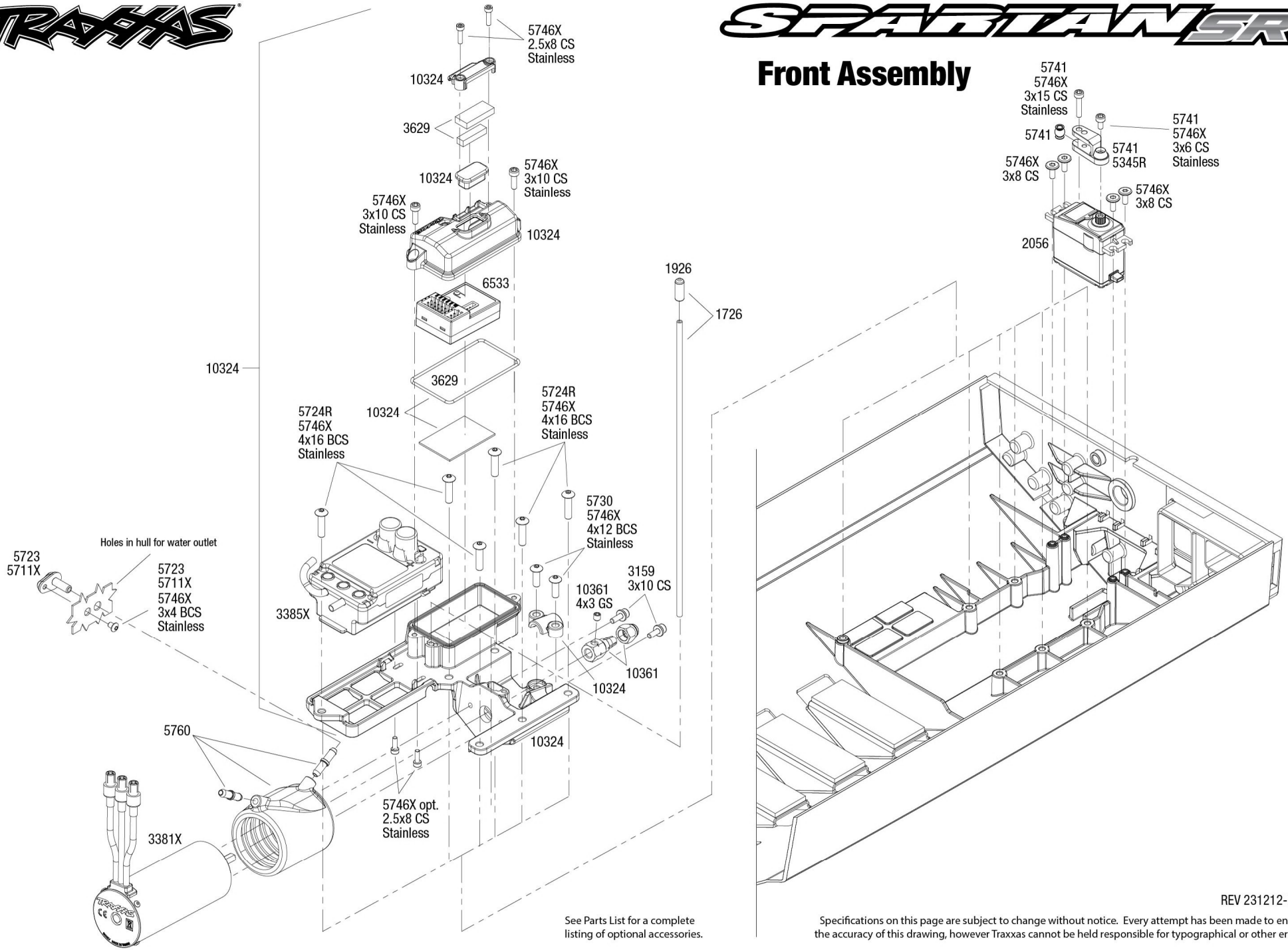

See Parts List for a complete listing of optional accessories.

REV 231212-R00

Specifications on this page are subject to change without notice. Every attempt has been made to ensure the accuracy of this drawing, however Traxxas cannot be held responsible for typographical or other errors.

SPARTAN SR

Chassis Assembly

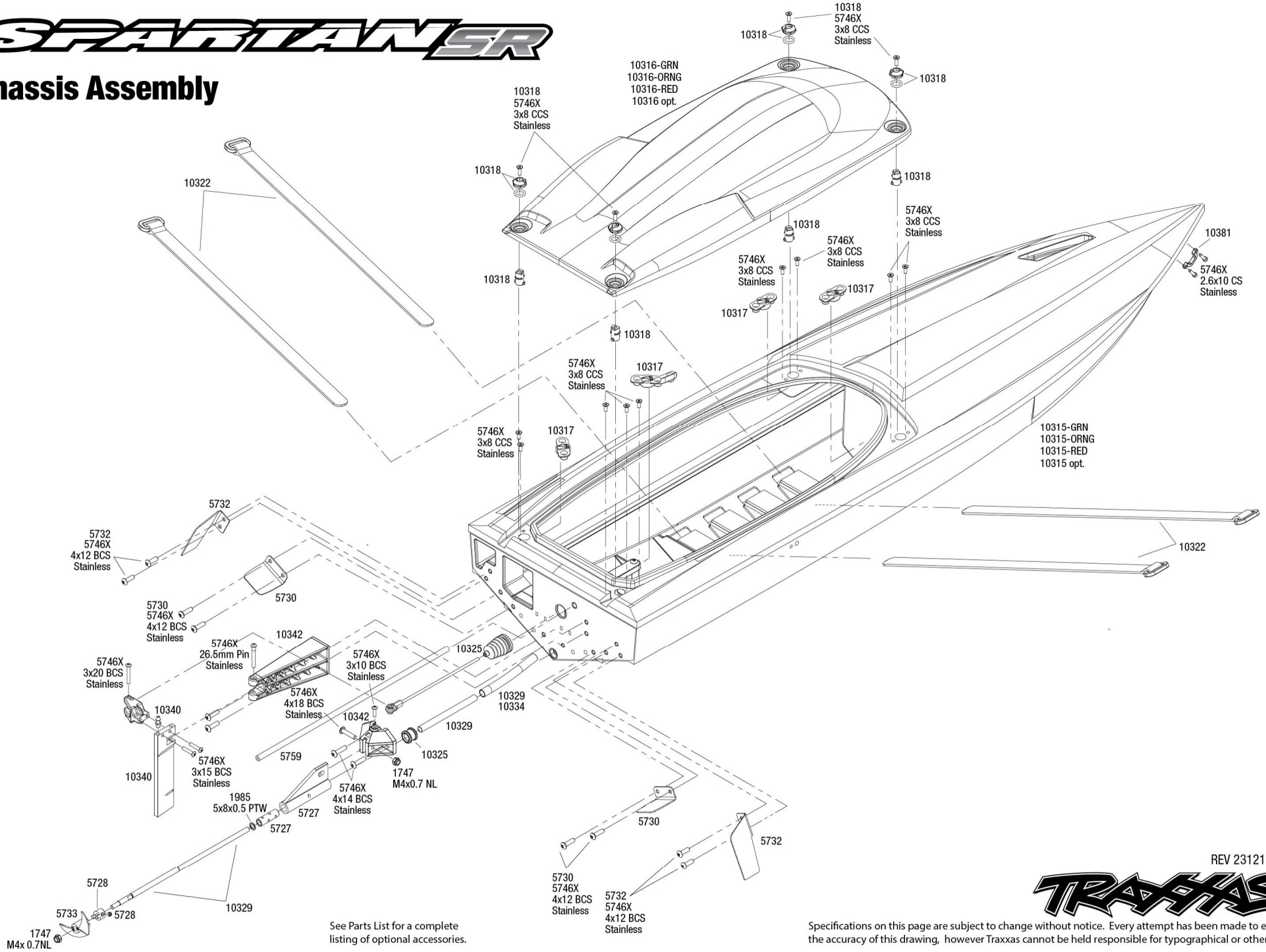

See Parts List for a complete listing of optional accessories.

REV 231212-R00

TRAXXAS®

Specifications on this page are subject to change without notice. Every attempt has been made to ensure the accuracy of this drawing, however Traxxas cannot be held responsible for typographical or other errors.