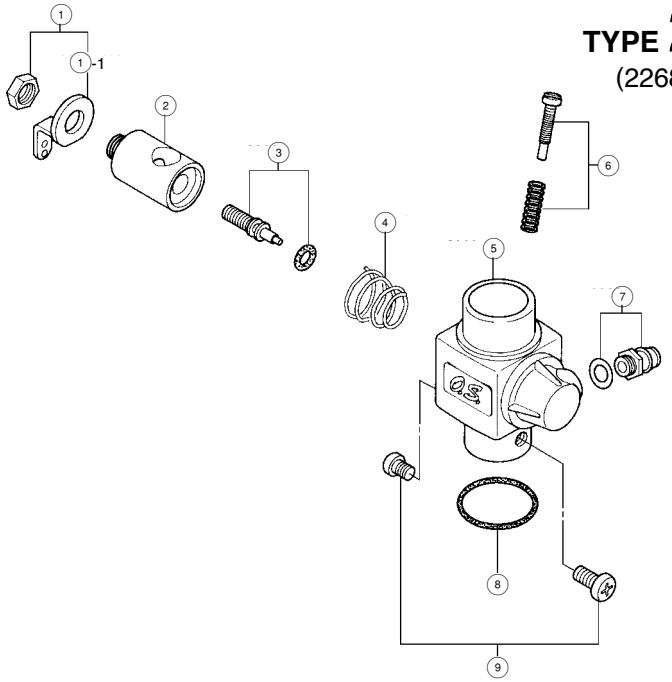

TYPE 20D

(22681030)

For 25FX

No.	Code No.	Description
1	2 2681 430	Throttle Lever Assembly
1-1	2 2681 419	Throttle Laver
2	2 2681 220	Carburettor Rotor
3	2 2681 600	Mixture Control Screw
4	2 2481 506	Rotor Spring (2pcs.)
5	2 2681 140	Carburettor Body
6	2 2681 320	Throttle Stop Screw
7	2 2681 953	Fuel Inlet
8	2 2615 000	Carburettor Rubber Gasket
9	2 3081 706	Carburettor Fixing Screw