TYPE 10H
(21081000)

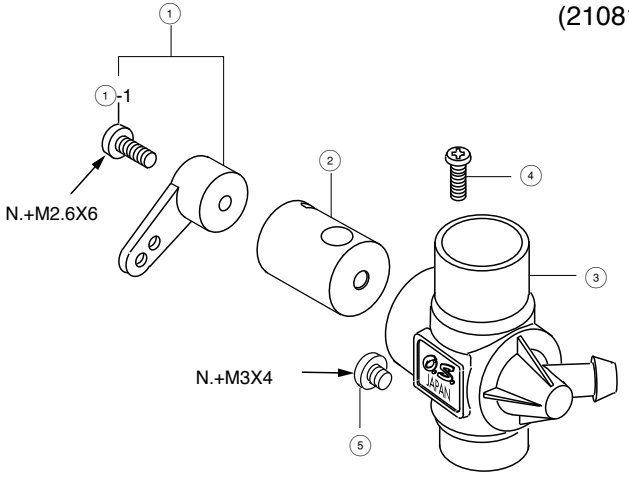

✻ Type of screw

C...Cap Screw B...Binding Head Screw M...Oval Fillister-head Screw F...Flat Head Screw N...Round Head Screw S...Set Screw

For 10LA

No.	Code No.	Description
1	2 1081 400	Throttle Lever Assembly
1-1	2 4081 300	Throttle Lever Fixing Screw
2	2 1081 200	Carburettor Rotor
3	2 1081 100	Carburettor Body
4	2 1081 300	Throttle Stop Screw
5	2 7881 120	Carburettor Fixing Screw