BASIC ASSEMBLIES

This kit may be built ONE OF THREE WAYS. Look over this instruction sheet carefully before you begin building. You may decide to combine parts from the different versions shown, or use parts from other AMT® kits for a really personalized model. After you've planned your car, follow the assembly instructions WITHOUT CEMENTING the parts together. This will familiarize you with the fit and location of parts.

For the neatest job, the various sub-assemblies and components should be painted before any chrome parts are attached. For example: in building the *custom* version, all non-chrome parts such as scoops, pans, skirts, etc. (except the clear window assembly) should be cemented in place and the body should then be painted as a unit for a smooth, professional-looking finish.

AMT® kits are molded from the finest high-impact styrene plastic. Use only paint and cement made for styrene plastic. Trim off any excess plastic before cementing parts together. When attaching CHROME parts (indicated by "C" after part names), scrape plating away where cement is to be applied. Use *just enough* cement to join plastic parts, and be especially careful not to smear cement on exposed surfaces.

1 ENGINES

STOCK

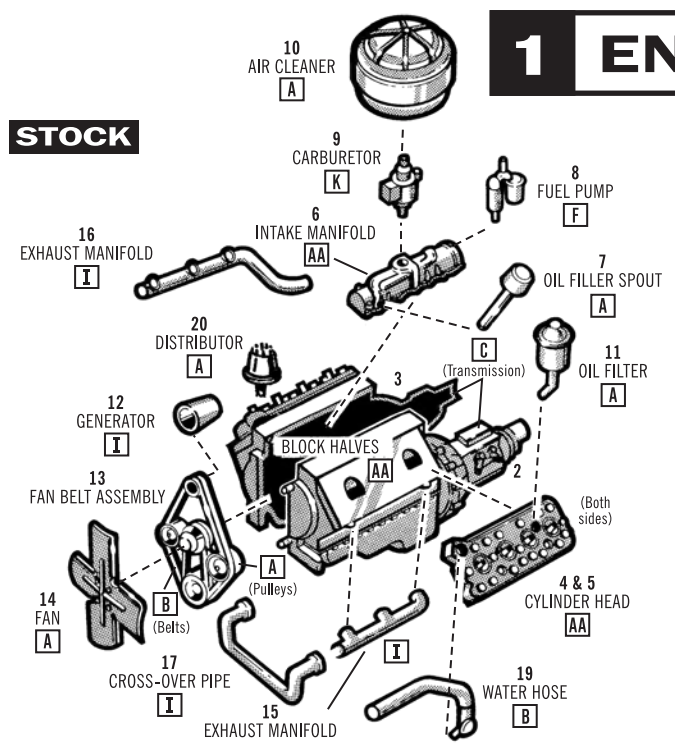

1. Cement engine block halves together. **2.** Cement cylinder heads to block. **3.** Cement carburetor, fuel pump and oil filler spout to intake manifold and fasten to block. **4.** Cement air cleaner to carburetor. **5.** Cement engine block halves together. **6.** Cement exhaust manifolds to crossover pipe as shown and cement other end to block. **7.** Cement generator and fan to fan-belt assembly and fasten to engine front. **8.** Cement water hoses to heads. Cement distributor to cylinder head.

CUSTOM

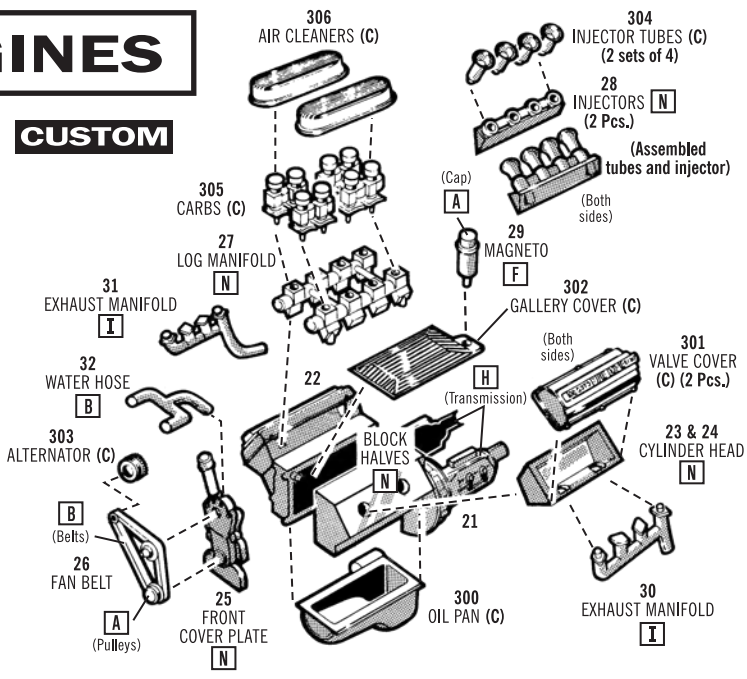

1. Cement engine block halves together. **2.** Cement oil pan to block. **3.** Cement valve covers to heads and fasten to block. **4.** Cement gallery cover to block. **5.** Cement front cover plate to engine front. **6.** Cement alternator to fan belt and fasten to cover plate. Fasten this assembly to front of engine. **7.** If you're using the "eight deuces" carburetor set-up, cement carburetors to log manifold and fasten to block. Cement air cleaners to carbs. **8.** If you're using the fuel injection set-up, cement injectors to block and fasten on injector tubes. **9.** Cement magneto to gallery cover. **10.** Cement exhaust manifolds and water hose into position.

2 WHEELS

35 & 308
EXTRA WHEEL PARTS
(NOTE: Cannot be used with tires included with this kit)

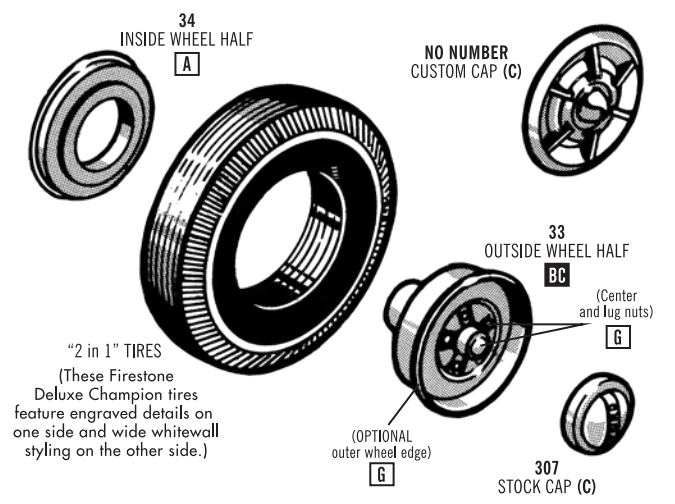

PAINT COLORS

A	Black	O	Yellow
B	Flat Black	R	Tan
C	Semi-Gloss Black	S	Brown
D	White	T	Lt. Blue
E	Flat White	U	Med. Blue
F	Silver	V	Dark Blue
G	Chrome (Bright Silver)	W	Transparent Blue
H	Aluminum	X	Lt. Green
I	Steel	Y	Dark Green
J	Brass	Z	Gray
K	Gold	AA	Turquoise
L	Amber	IC	Interior Color
M	Transparent Amber	BC	Body Color
N	Red	▲	Semi-Gloss
O	Transparent Red	△	Gloss
P	Orange	◭	Metallic

Common colors often used for the exterior include: Raven Black, Sheridan Blue, Glacier Blue, Woodsmoke Gray, Timberline Green, Fernmist Green, Seafoam Green, Carnival Red, Polynesian Brown, Sandpiper Tan, Sungate Ivory, Coral Flame, Flamingo Red, Cascade Green, Dove Tone Gray and White. Custom colors may also be used to provide a creative alternative for the CUSTOM version.

✻ **Common interior colors include:** Brown, Dark Blue, Goldtone, Gray, Green and matching Body Colors. Custom colors may include White, Tan, Black, Red. Two-Tone combinations are a great option for interior detailing.

3 CHASSIS

Bottom View

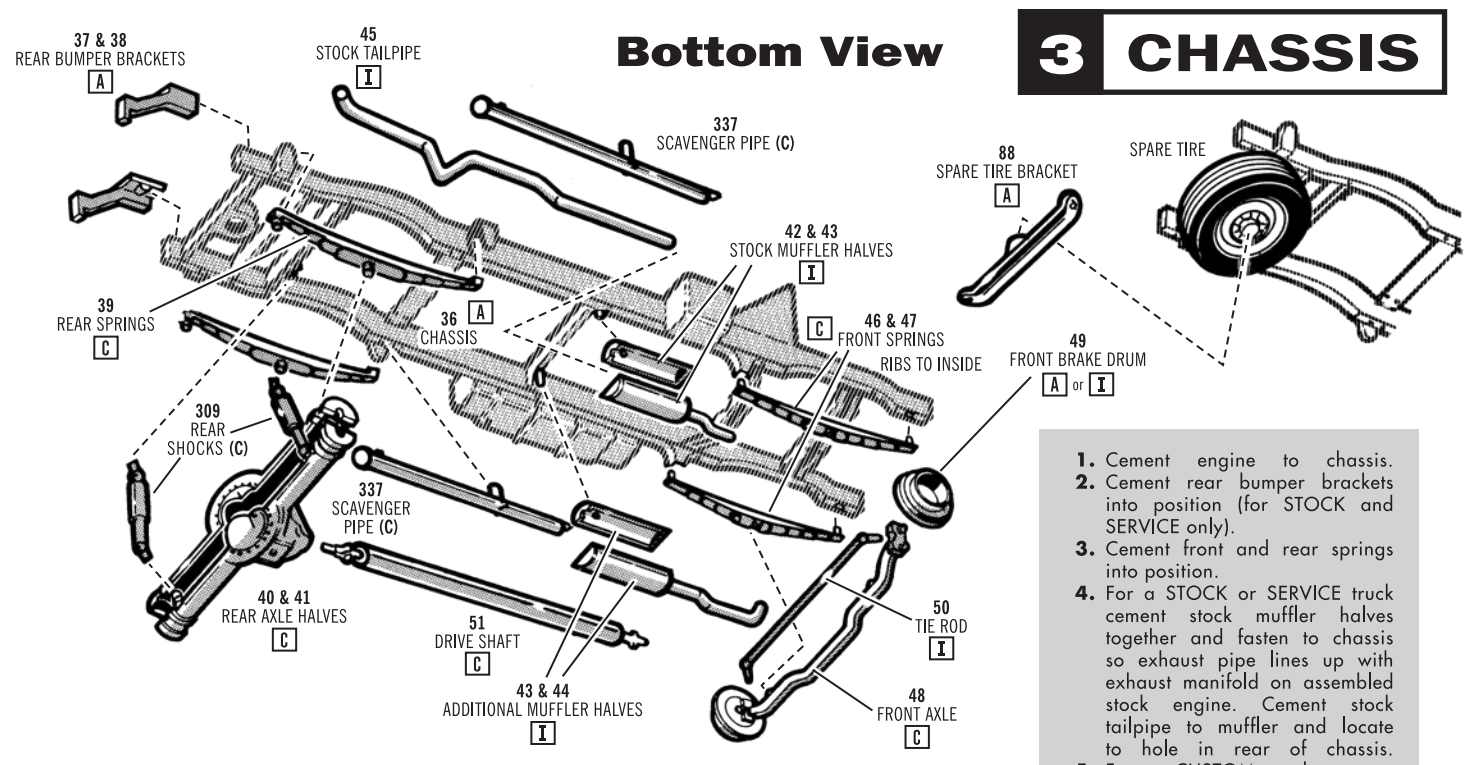

Top View

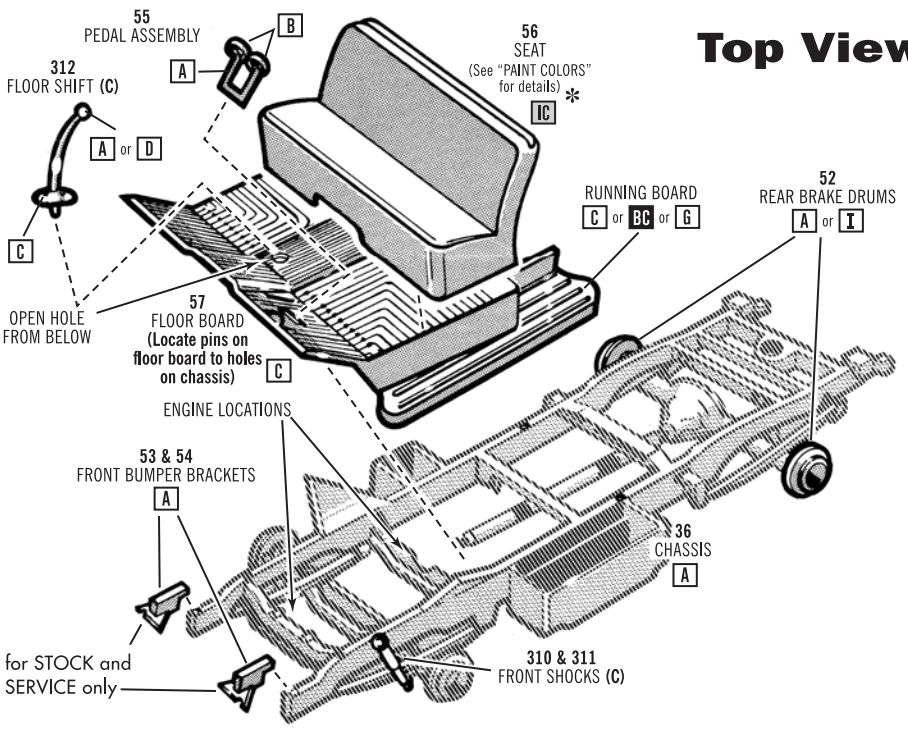

1. Cement engine to chassis.
2. Cement rear bumper brackets into position (for STOCK and SERVICE only).
3. Cement front and rear springs into position.
4. For a STOCK or SERVICE truck cement stock muffler halves together and fasten to chassis so exhaust pipe lines up with exhaust manifold on assembled stock engine. Cement stock tailpipe to muffler and locate to hole in rear of chassis.
5. For a CUSTOM truck, cement stock muffler halves together and additional muffler halves together, then fasten to chassis so exhaust pipes line up with exhaust manifold folds on assembled custom engine. Cement scavenger pipes into position.
6. Cement rear axle halves together.
7. Cement driveshaft to assembled rear axle.
8. Cement rear shocks to rear axle.
9. Cement rear axle to rear springs so driveshaft locates into assembled engine and rear shocks locate on chassis.
10. Cement front axle to front springs with tabs inside spring ribs and notch to rear. Cement tie rod to front springs and axle.
11. Cement spare tire to bottom of chassis. Cement spare tire bracket to spare tire (see detail).
12. Cement brake drums (three holes) to front axle. Large hole must line up with notch on axle. Cement rear brake drums to rear axle.
13. Cement front bumper brackets into position.
14. Cement front shocks into position.
15. Cement seat, pedal assembly and floor shift (CUSTOM only) to floor board.
16. Cement floor board to chassis.

4 BODY

1. Cement radiator to rear of front panel.
2. Cement horn to rear of front panel.
3. Place hood in position on body. Snap metal clip over locating tabs on hood and body (shown by arrow).
4. Cement firewall into position from rear of body.
5. Using a small amount of cement, place windows into position.
6. Cement speaker (CUSTOM only) and mirror into position as shown.
7. For a STOCK truck, cement stock steering wheel and column shift lever to steering column. Slide steering column through slot in instrument panel. Cement panel to body.
8. For a SERVICE truck, cement two-way radio to instrument panel and follow step #7.
9. For a CUSTOM truck, cement custom steering wheel to steering column and follow step #7, omitting the column shift lever.

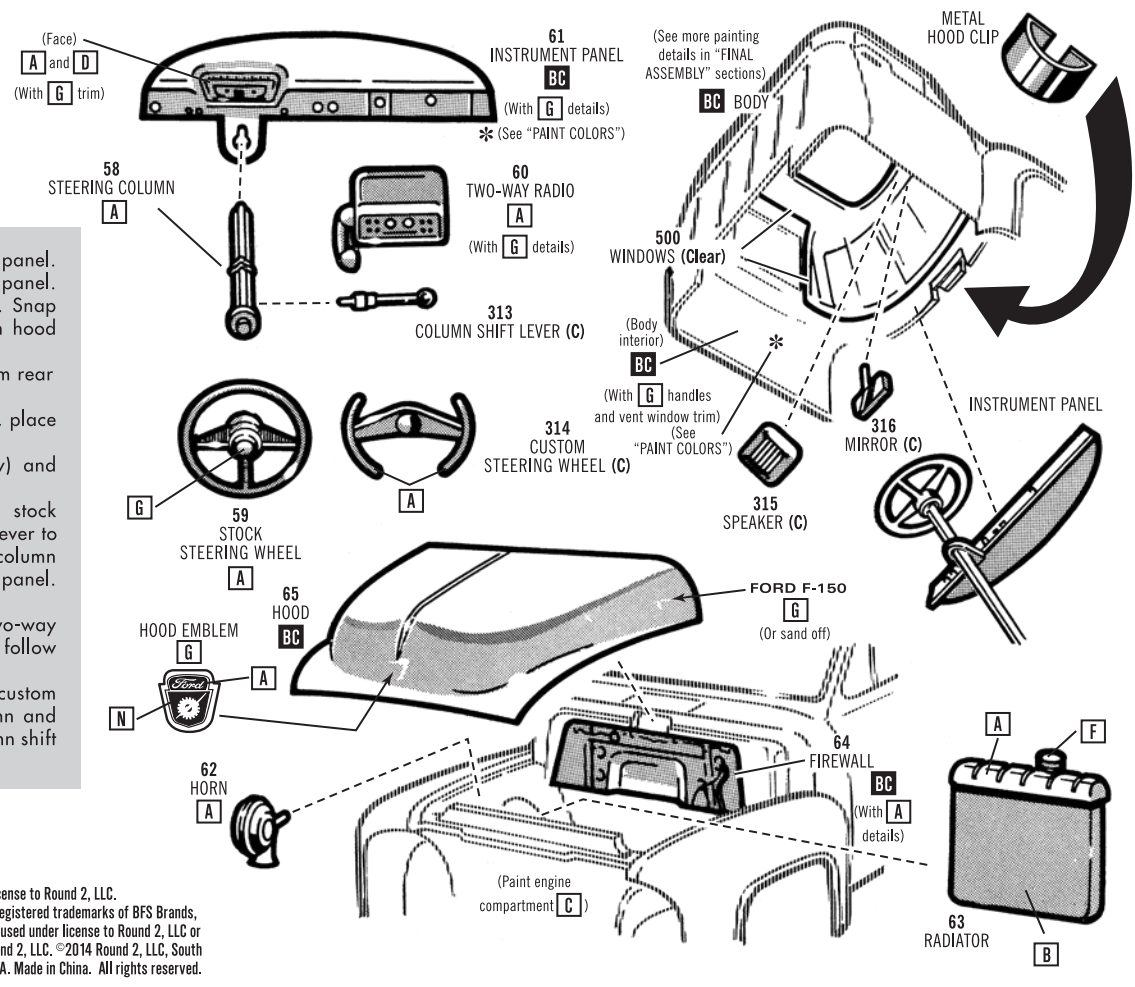

Ford Motor Company Trademarks and Trade Dress used under license to Round 2, LLC. www.FordMotorCompany.com. Firestone and F Shield Logo are registered trademarks of BFS Brands, LLC and are used with permission. Other names and trademarks used under license to Round 2, LLC or by permission. AMT and design is a registered trademark of Round 2, LLC. ©2014 Round 2, LLC, South Bend, IN 46628 USA. Product and packaging designed in the USA. Made in China. All rights reserved.

FINAL STOCK ASSEMBLY

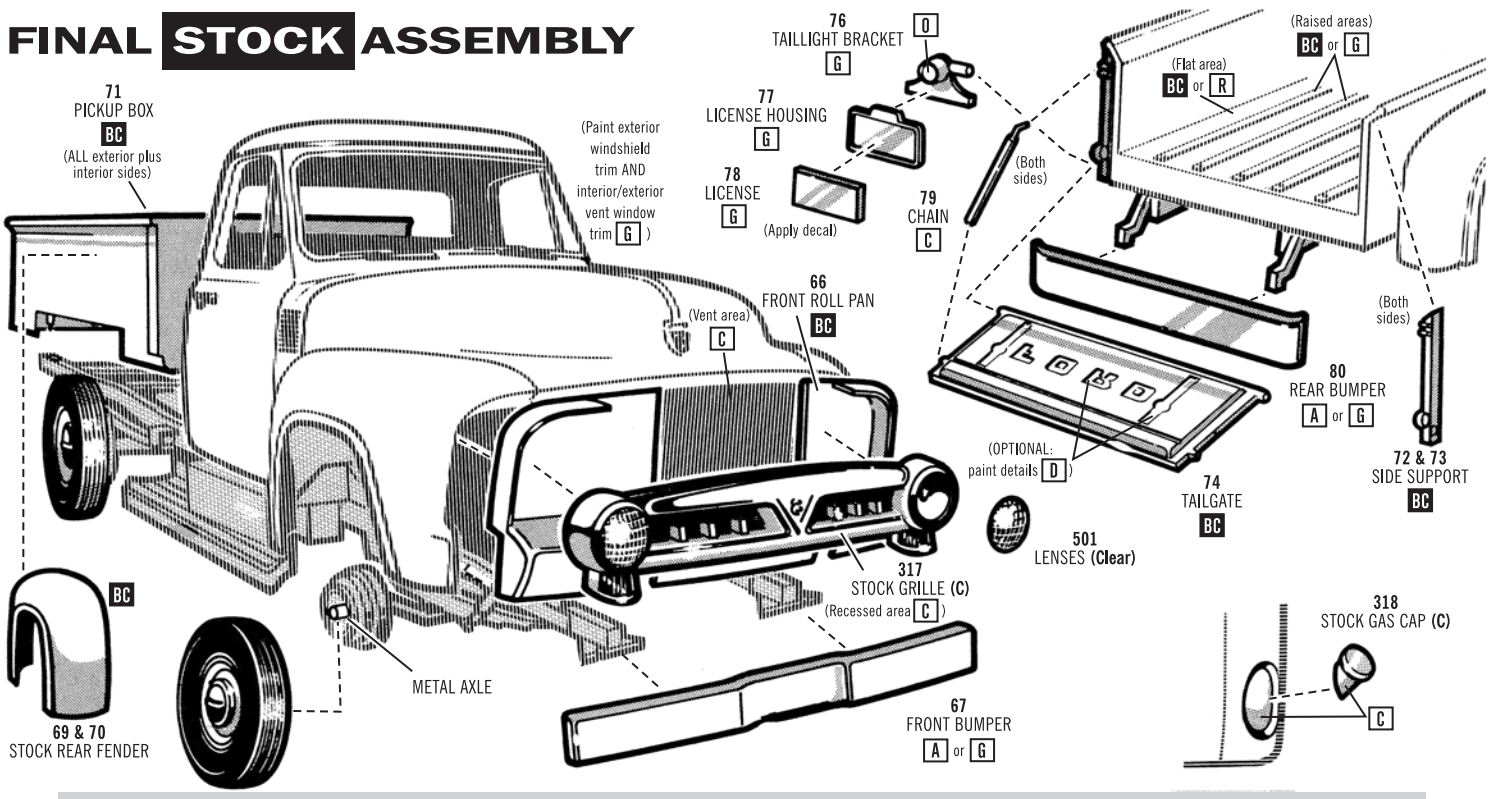

1. To mount wheels onto chassis, insert metal axles into one wheel, place metal axle through axle on chassis and snap on other wheel.
2. Cement front pan to body.
3. Cement body and pickup box to chassis.
4. Cement stock rear fenders to pickup box.
5. Using a small amount of cement, place lenses into stock grille and fasten to front roll pan.
6. Cement front bumper to bumper brackets.
7. Cement one side support to pickup box and place tailgate pin side support as shown, cement 2nd side support to pickup box with tailgate pins in position. If you want the tailgate down fasten chains in position.
8. Cement license to license housing and fasten to taillight bracket. Cement this assembly to side supports.
9. Cement rear bumper to brackets.
10. Cement stock gas cap into position on left side of truck (see detail).

FINAL SERVICE ASSEMBLY

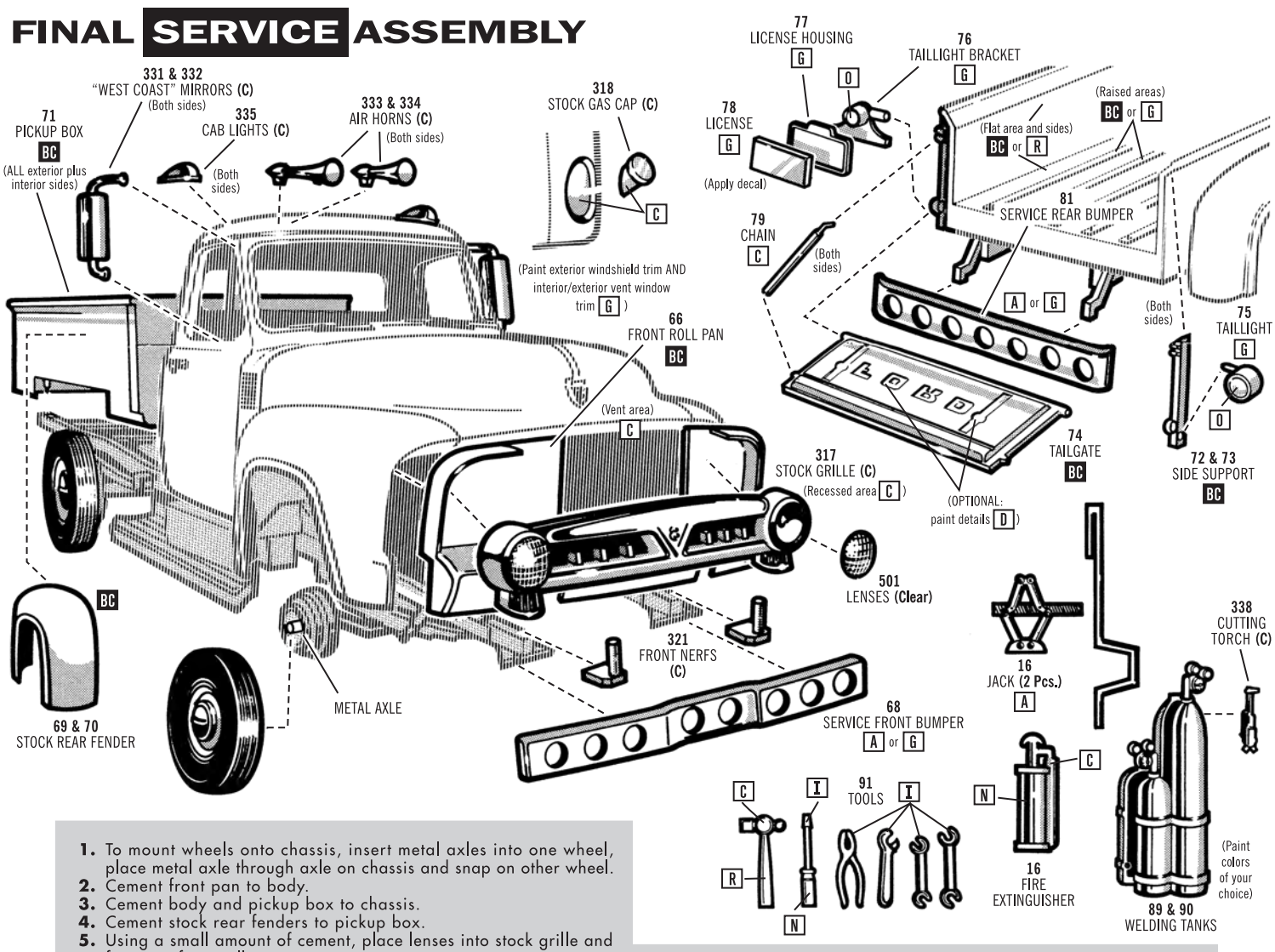

1. To mount wheels onto chassis, insert metal axles into one wheel, place metal axle through axle on chassis and snap on other wheel.
2. Cement front pan to body.
3. Cement body and pickup box to chassis.
4. Cement stock rear fenders to pickup box.
5. Using a small amount of cement, place lenses into stock grille and fasten to front roll pan.
6. Cement service front bumper and front nerfs to brackets.
7. Cement "West Coast" mirrors into position.
8. Cement cab lights and air horns to roof.
9. Cement one side support to pickup box and place tailgate pin in side support as shown, cement 2nd side support to pickup box with tailgate pins in position. If you want the tailgate down, cement chains into position.
10. Cement license to license housing and fasten to taillight bracket. Cement this assembly to side supports.
11. Cement additional taillight into position.
12. Cement service rear bumper to brackets.
13. Place tools, jack, tanks, fire extinguisher and torch in pickup box.
14. Cement stock gas cap into position on left side of truck (see detail).
15. Apply service decals of your choice using instructions on back of decal sheet.

FINAL CUSTOM ASSEMBLY

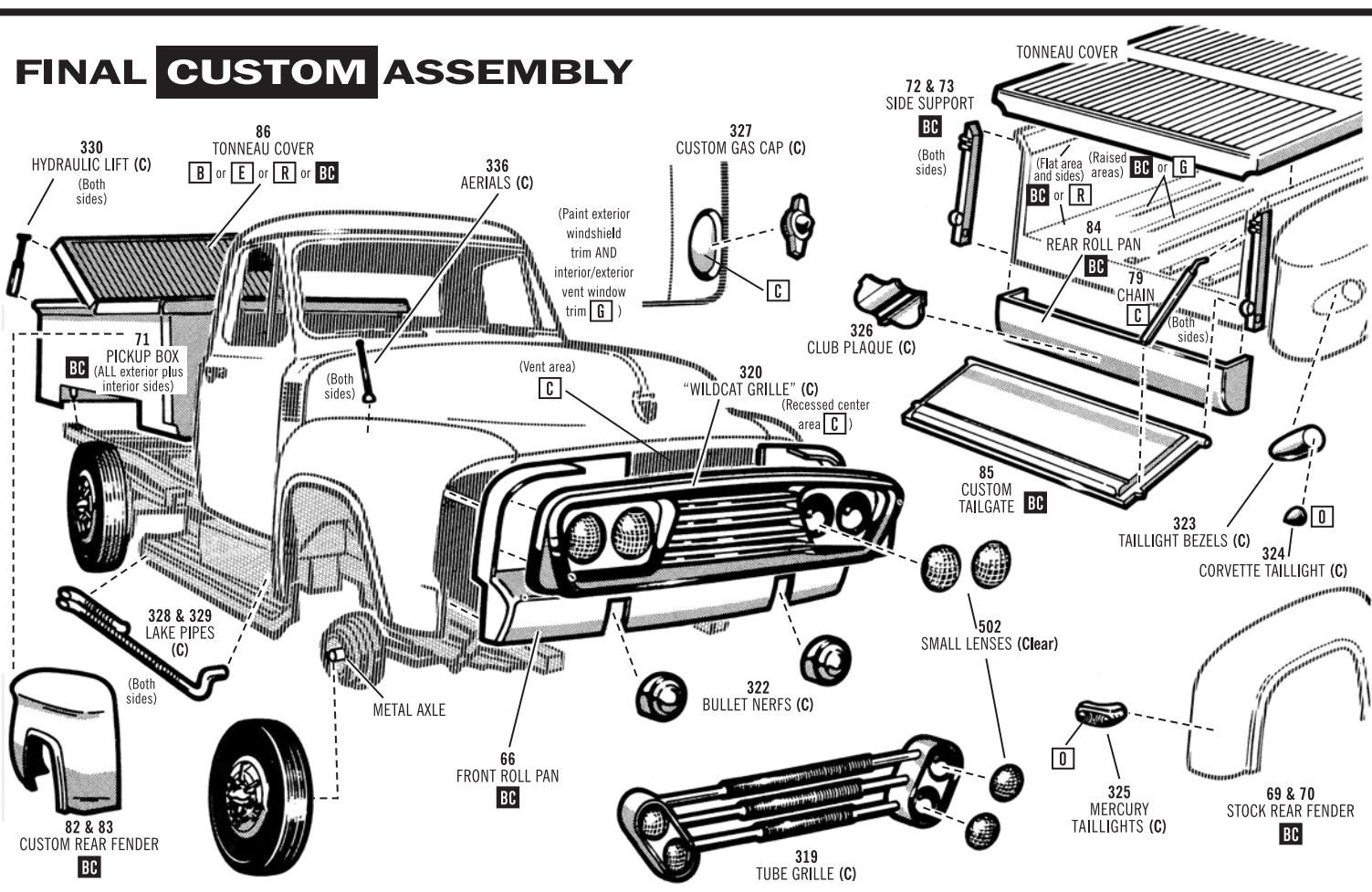

1. To mount wheels onto chassis, insert metal axles into one wheel, place metal axle through axle on chassis and snap on other wheel.
2. Cement body and pickup box to chassis.
3. Cement front roll pan to body and rear roll pan to pickup box.
4. If you're using the custom rear fenders (with chrome taillight bezels and Corvette taillights) make sure notches in fenders line up with rear of running boards and cement to pickup box. If you're using the stock rear fenders (with the Mercury taillights) cement them to pickup box.
5. Using a small amount of cement, place small lenses into either the "Wild Cat" grille or the tube grille and fasten to front roll pan.
6. Cement bullet nerfs to front roll pan.
7. Cement lake pipes into position.
8. Positioning of aerials is left up to you.
9. If you're using the tonneau cover with hydraulic lifts, bend tonneau cover along seam. Cement one end of hydraulic lift to tonneau cover and the other end to pickup box.
10. You may cement tonneau cover to pickup box and omit lifts.
11. Cement one side support to pickup box and place tailgate pin in position as shown, cement 2nd side support to pickup box with tailgate pins in position. If you want the tailgate down, cement chains in position.
12. Cement club plaque to rear roll pan.
13. Cement custom gas cap into position on left side of truck (see detail).
14. Apply custom decals of your choice, following instructions on back of decal sheet.

'53 FORD 1/25 Scale TRUCK

3 in 1 Trophy SERIES

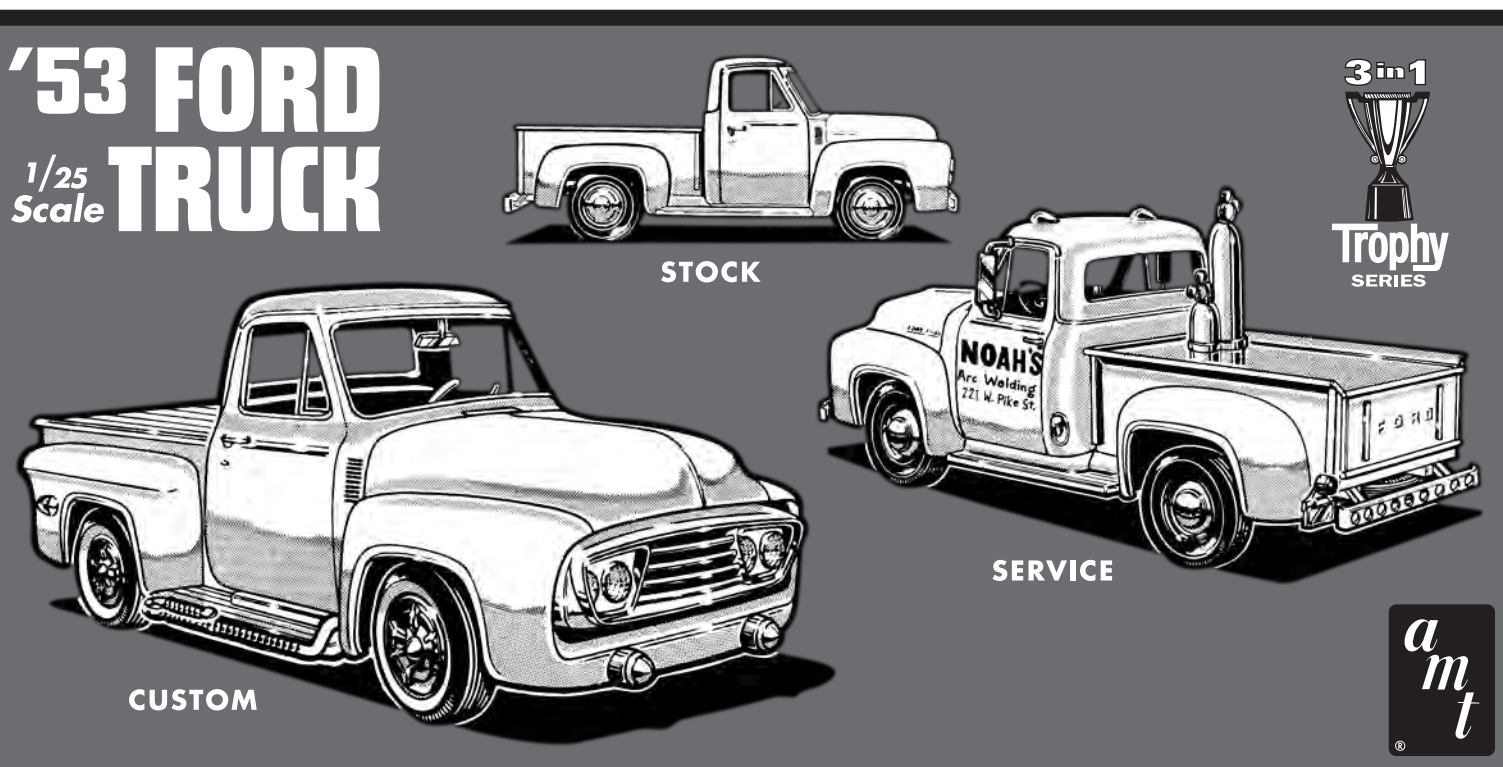

amt