FINAL ASSEMBLIES

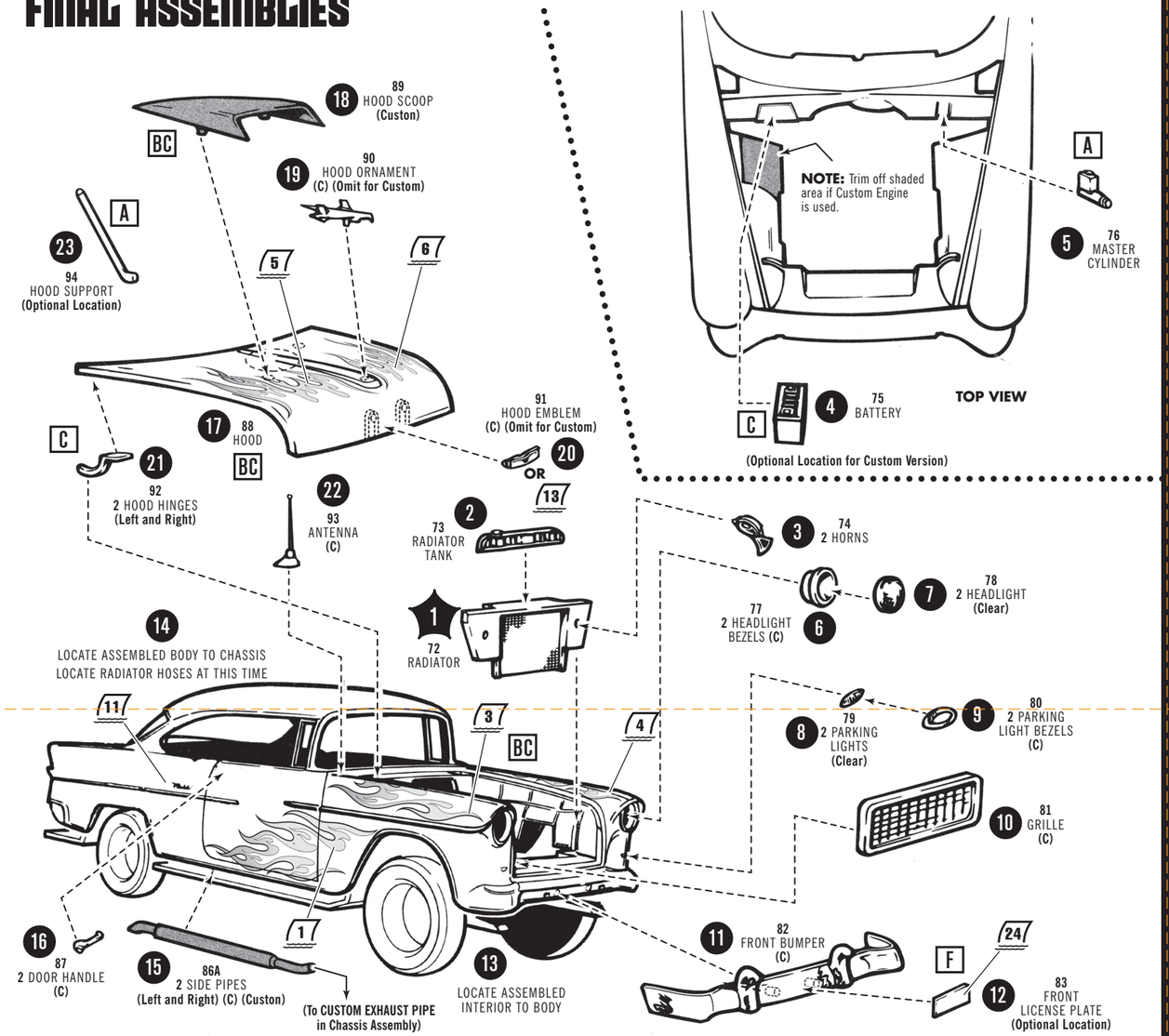

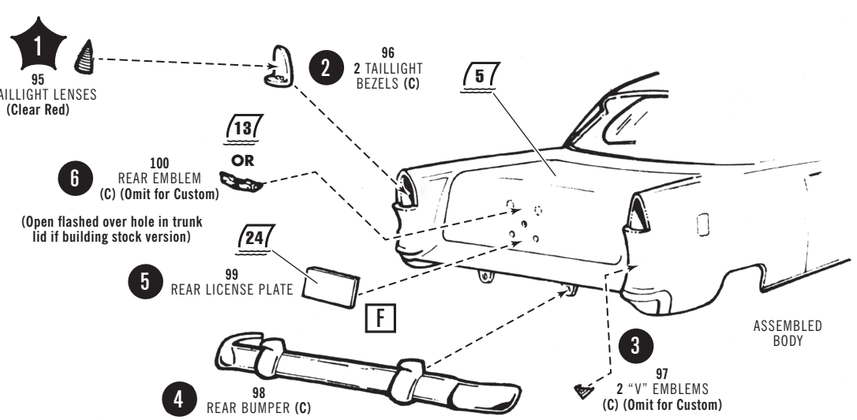

'55 Chevrolet® BEL AIR® HARDTOP

amt®

A1452-200

READ THIS BEFORE YOU BEGIN

This kit may be built more than one way. Look over this instruction sheet carefully before you begin building. You may decide to combine parts from the different versions shown, or use parts from other AMT® kits. After you've planned your car, follow the assembly instructions and "TEST FIT" the parts without cementing. This will familiarize you with the location of parts.

For best results, the various sub-assemblies and components should be painted before any "CHROME" parts are attached. For example: When attaching "NON CHROME" engine parts, it is best to cement them in place and paint as a unit. "CHROME" PARTS ARE INDICATED BY (C).

AMT® kits are molded from the finest high-impact styrene plastic. Use only paint and cement made for styrene. Trim excess plastic from parts before joining. When attaching "CHROME" or painted parts, scrape plating or paint away where parts are to be joined. Cement all parts unless otherwise indicated by the instructions. Use just enough cement to join parts and be careful not to smear cement on exposed surfaces.

Built according to the instructions on this sheet, you should have no trouble assembling your kit. Just FOLLOW THE NUMBERS as the instructions are numbered in order of assembly.

PAINT COLORS

A	Black	H	Aluminum	O	Transparent Red	V	Dark Blue	BC	Body Color
B	Flat Black	I	Steel	P	Orange	W	Transparent Blue	IC	Interior Color
C	Semi-Gloss Black	J	Brass	Q	Yellow	X	Lt. Green	▲	Semi-Gloss
D	White	K	Gold	R	Tan	Y	Dark Green	△	Gloss
E	Flat White	L	Amber	S	Brown	Z	Gray	◭	Metallic
F	Silver	M	Transparent Amber	T	Lt. Blue	AA	Purple		
G	Chrome (Bright Silver)	N	Red	U	Med. Blue	BB	Beige		

gm OFFICIAL LICENSED PRODUCT
GOODYEAR OFFICIAL LICENSED PRODUCT 95-70408-20175
GENERAL MOTORS Trademarks used under license to Round 2, LLC. Goodyear (and Winged Foot Design) and Blimp Design are trademarks of The Goodyear Tire & Rubber Company used under license by Round 2, LLC, South Bend, IN 46628. Copyright 2023 The Goodyear Tire & Rubber Company. AMT and design is a registered trademark of Round 2, LLC. ©2023 Round 2, LLC, South Bend, IN 46628 USA. Product and packaging designed in the USA. Made in China. All rights reserved.

BASIC ENGINE

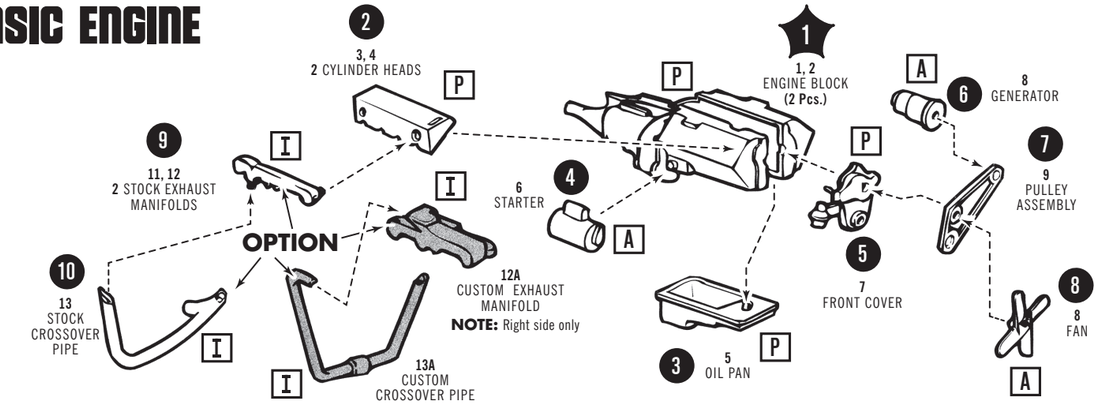

FINAL ENGINE

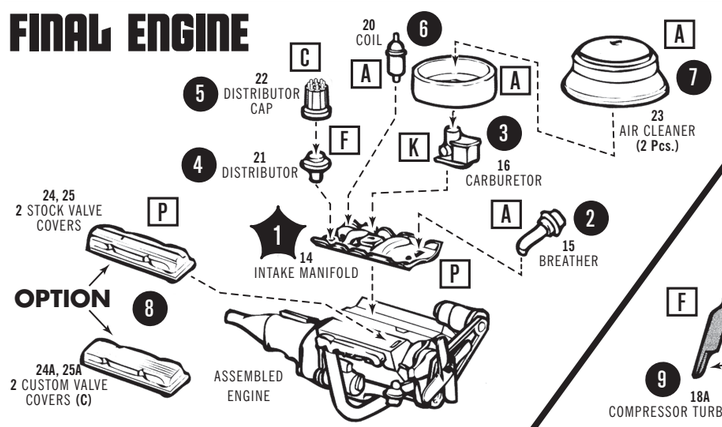

CUSTOM OPTION

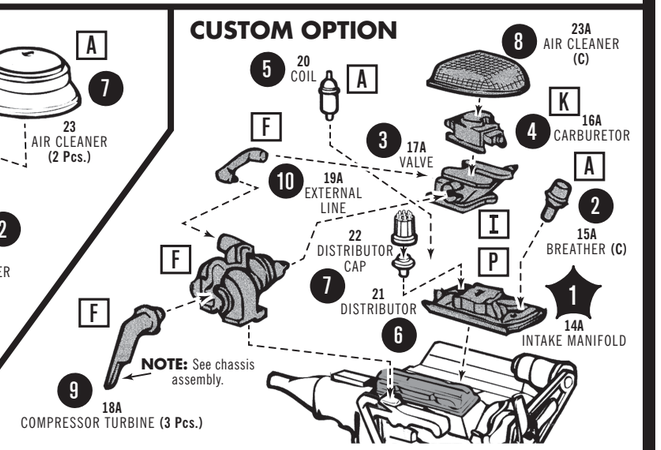

WIRING DETAIL

NOTE: Lay on flat surface and cut with a sharp object.
Cut first piece of small diameter vinyl 1-7/8" long.
Cut second piece 1-13/16 inches long.
Third piece 1-3/4 inches long.
Fourth 1-11/16 inches long. Repeat for other side.

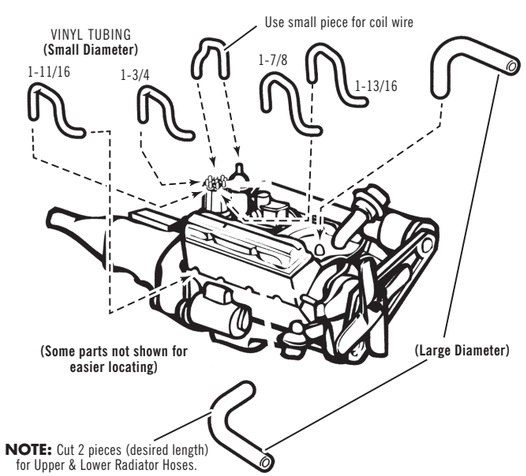

INTERIOR

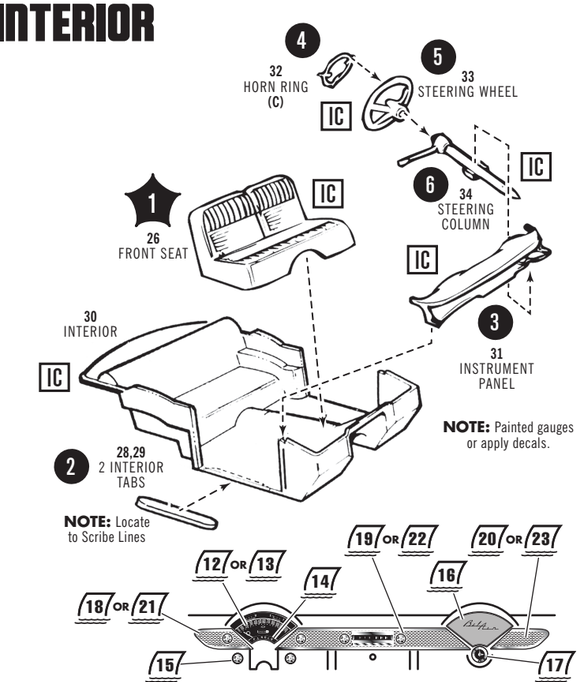

WHEELS

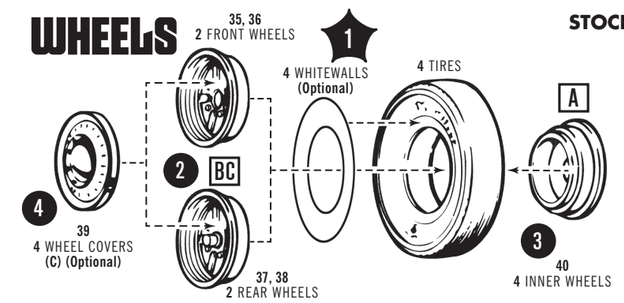

CUSTOM

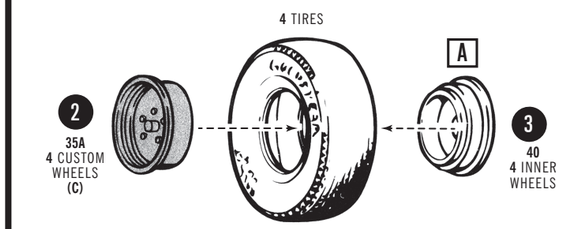

CHASSIS SHOWN UPSIDE DOWN

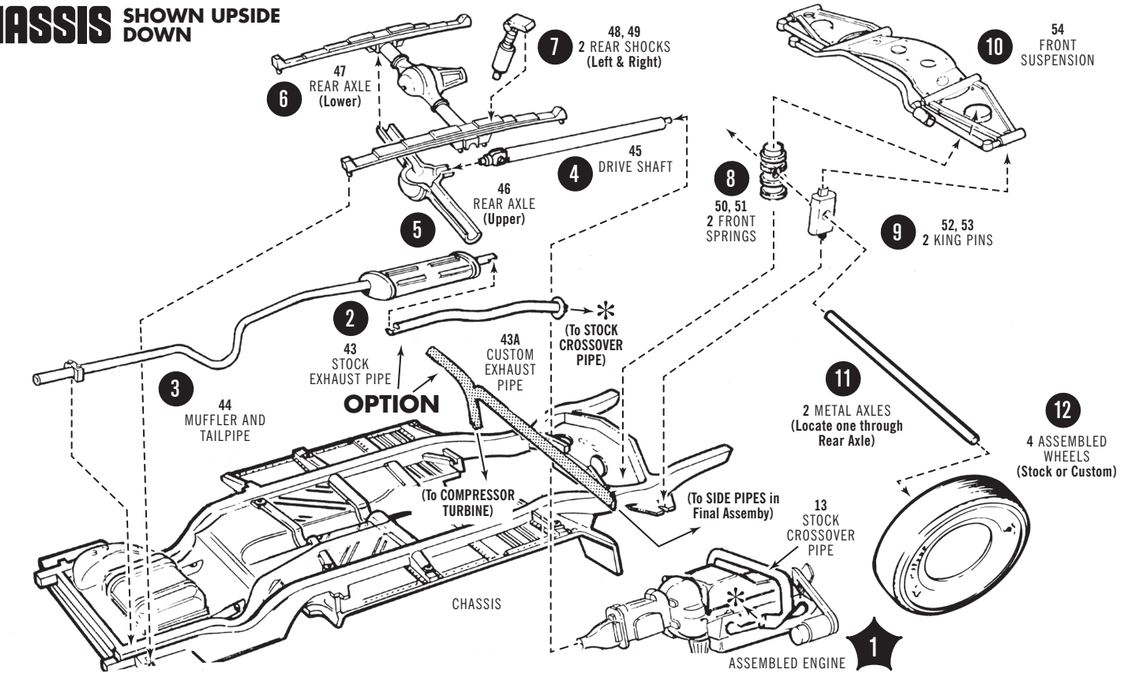

BODY SHOWN UPSIDE DOWN
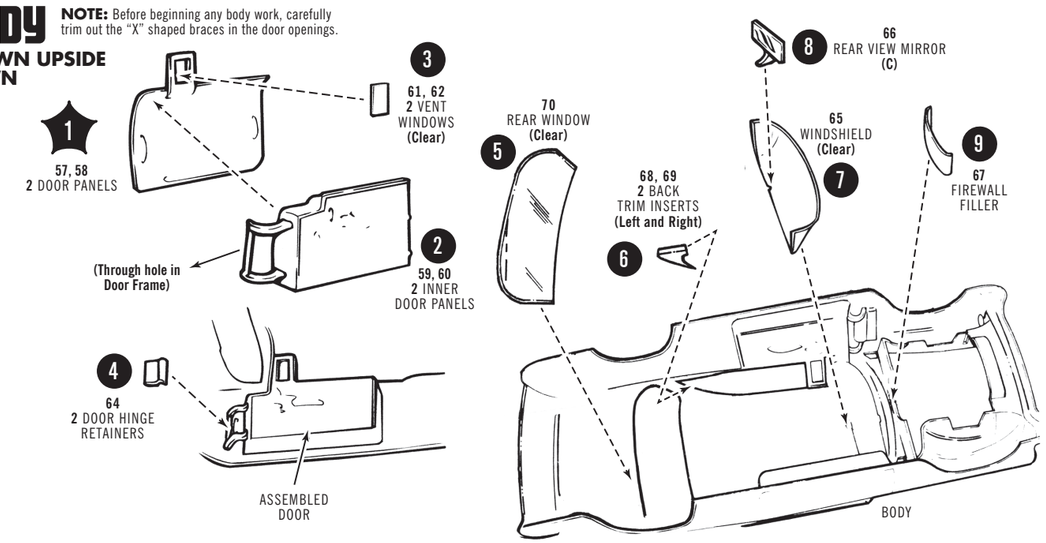
NOTE: Before beginning any body work, carefully trim out the "X" shaped braces in the door openings.