amt

A1241-200

1967 AUTHENTIC KIT MUSTANG GT FASTBACK

1/25 SCALE

READ THIS BEFORE YOU BEGIN

Cement all parts unless otherwise indicated.

Look over this instruction sheet carefully before you begin building. Follow the assembly instructions and "test-fit" the parts without cementing. This will familiarize you with the location of the parts.

For the best results, the various sub-assemblies and components should be painted before any "chrome" parts are attached. For example: When attaching "non-chrome" body accessories, it is best to cement them in place and paint the body as a unit.

AMT® kits are molded from the finest High-Impact Styrene plastic. Use only paint and cement made for Styrene. Trim excess plastic from parts before joining. When attaching "chrome" parts, scrape plating away where parts are to be joined. Use just enough cement to join parts, and be careful not to smear cement on exposed surfaces.

Built according to the instructions on this sheet, you should have no trouble assembling your kit. Just FOLLOW THE NUMBERS, as parts are numbered in order of assembly. (C) INDICATES "CHROME" PARTS

BUILDING TIPS FOR THE ADVANCED MODELER

For the best possible finish, your kit should be painted, even if molded in color. Paint should be applied evenly, in several thin coats rather than one heavy coat. The first coat should not completely cover the surface. Each layer should be allowed to thoroughly dry before the next is applied. Also, each coat should be "wet sanded", except for the final coat, using No. 1200 wet or dry sandpaper which is slightly damp. Be careful not to remove any detail while sanding.

It is important to keep your hands clean when working with your model. Wash parts thoroughly before painting to remove any mold release agent that may have been used during manufacture, body oil from your hands, sanding residue, and dust, which is naturally attracted to plastic by static electricity. Use a mild solution of dishwashing detergent and water. A tack rag should be used to dry the parts, DO NOT use paper towels or tissues, since they will leave lint on the part.

Parting lines and glue joints should be sanded or filed prior to painting and cementing. Because paint has a tendency to draw away from sharp edges, they should be lightly filed. Use filler putty designed for plastic to fill small gaps that may occur between parts and to blend contours. This should be done only after the first, or "primer," coat of paint is applied.

When painting a two-tone body, the lightest color should be painted first. Use frosted, or "magic," tape to mask off the area you do not want painted. After the second color is dry to the touch, the tape can be removed. Use a very fine brush to touch up edges if necessary. If decals are to be added, do so before adding any gloss coat. A gloss coat will help even out the edges between the two colors as well as set the decals.

PAINT COLORS

A	Black	Q	Yellow
B	Flat Black	R	Tan
C	Semi-Gloss Black	S	Brown
D	White	T	Lt. Blue
E	Flat White	U	Med. Blue
F	Silver	V	Dark Blue
G	Chrome (Bright Silver)	W	Transparent Blue
H	Aluminum	X	Lt. Green
I	Steel	Y	Dark Green
J	Brass	Z	Gray
K	Gold	AA	Ford Engine Blue
L	Amber	IC	Interior Color
M	Transparent Amber	BC	Body Color
N	Red	▲	Semi-Gloss
O	Transparent Red	△	Gloss
P	Orange	◭	Metallic

EXTERIOR COLORS

Standard Colors Include: Raven Black, Frost Turquoise, Acapulco Blue, Beige Mist, Lime Gold, Nightmist Blue, Wimbledon White, Brittany Blue, Candyapple Red, Burnt Amber, Clearwater Aqua, Vintage Burgundy, Dark Moss Green, Sauterne Gold, Silver Frost, Pebble Beige and Springtime Yellow.

INTERIOR COLORS

Standard Colors Include: Black, Parchment, Red, Light Brown, Dark Blue, Dark Ivy Gold and Dark Aqua.

It is recommended that you search the internet for additional color references and details.

Ford Official Licensed Product

Firestone OFFICIALLY LICENSED PRODUCT

Ford Motor Company Trademarks and Trade Dress used under license to Round 2, LLC. Firestone and the F-Shield Logo are registered trademarks of Bridgestone Brands, LLC and are used with permission. AMT and design is a registered trademark of Round 2, LLC. ©2021 Round 2, LLC, South Bend, IN 46628 USA. Product and packaging designed in the USA. Made in China. All rights reserved.

VISIT US ONLINE AT...

round2models.com

BN

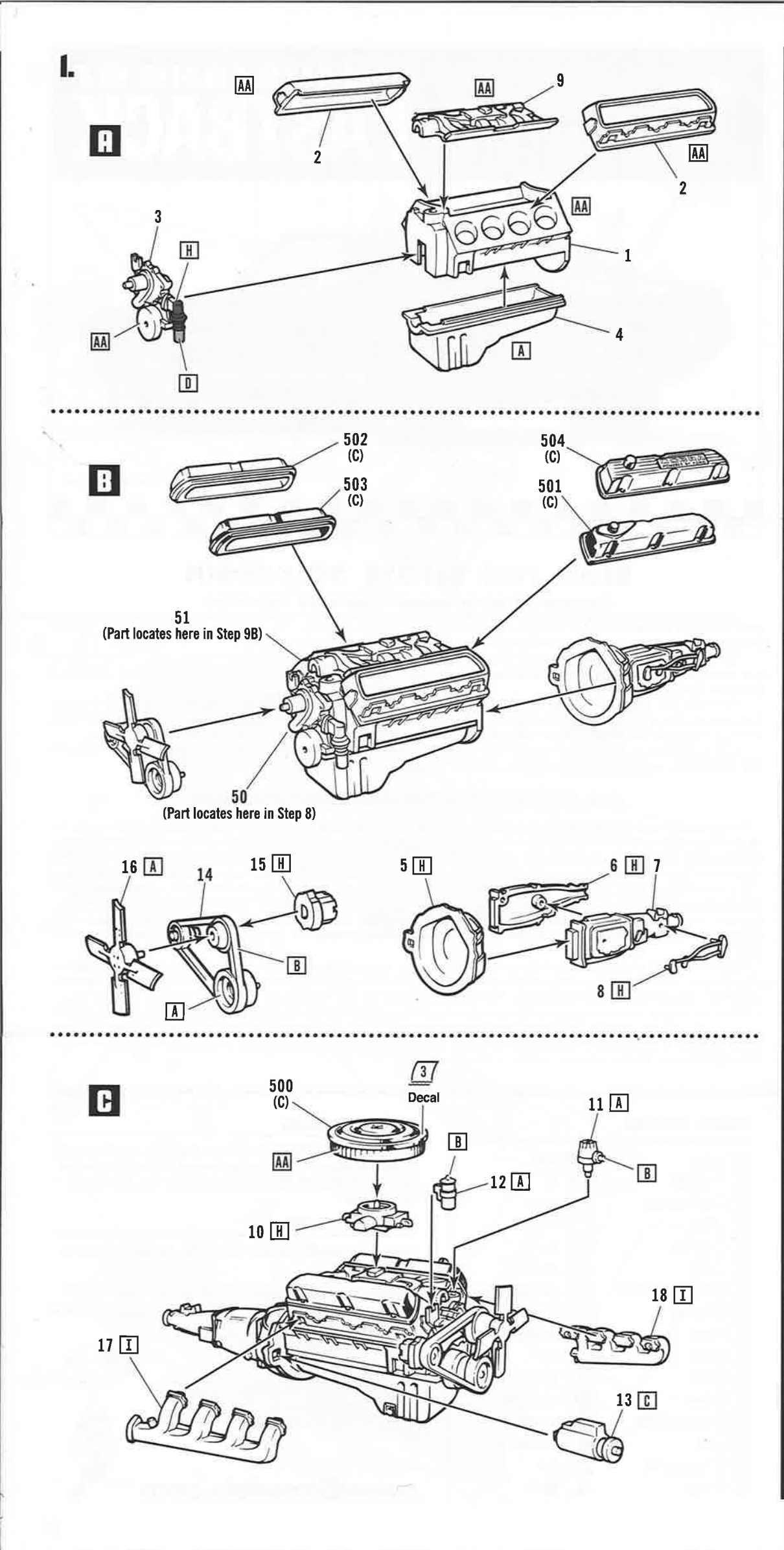
I.
A
AA
2
AA
9
AA
2
AA
1
3
H
AA
D
4
A
B
502
(C)
503
(C)
504
(C)
501
(C)
51
(Part locates here in Step 9B)
50
(Part locates here in Step 8)
16 A
14
15 H
B
A
5 H
6 H
7
8 H
C
500
(C)
3
Decal
AA
B
12 A
11 A
B
10 H
18 I
17 I
13 C

1967

2.

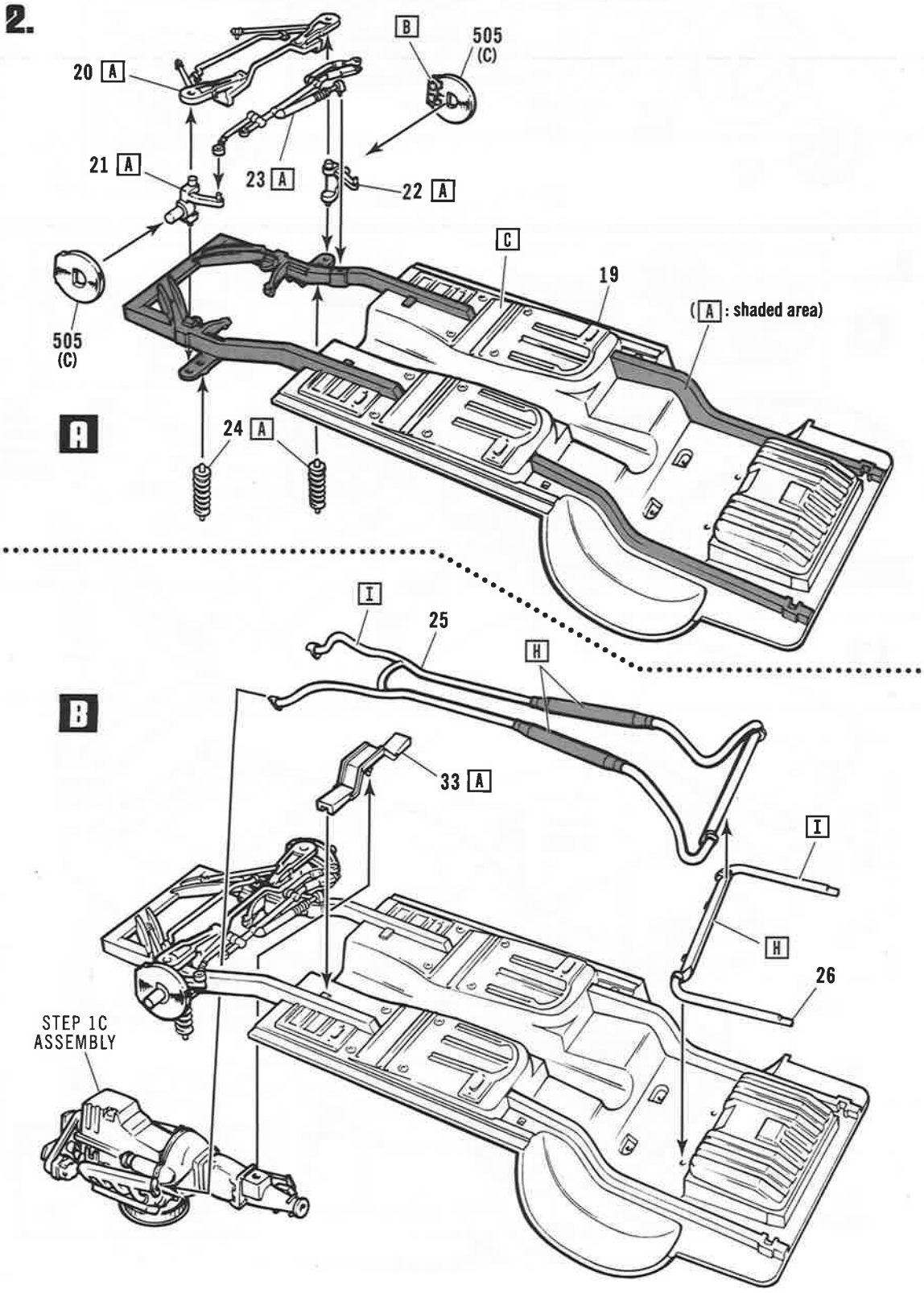
20 A
B
505
(C)
21 A
23 A
22 A
C
19
(A : shaded area)
505
(C)
A
24 A
I
25
H
B
33 A
I
H
26
STEP 1C
ASSEMBLY

3.

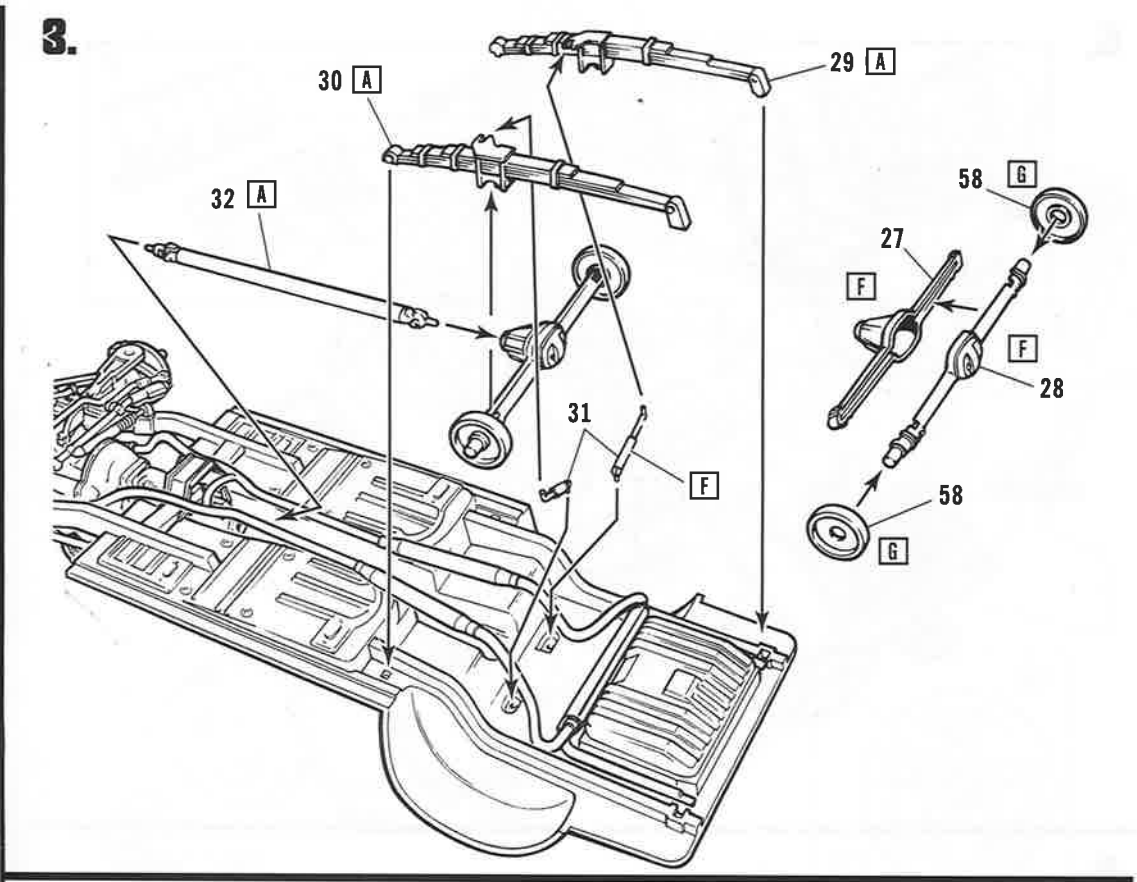

29 A
30 A
32 A
58 G
27
F
F
28
31
F
58
G

4.

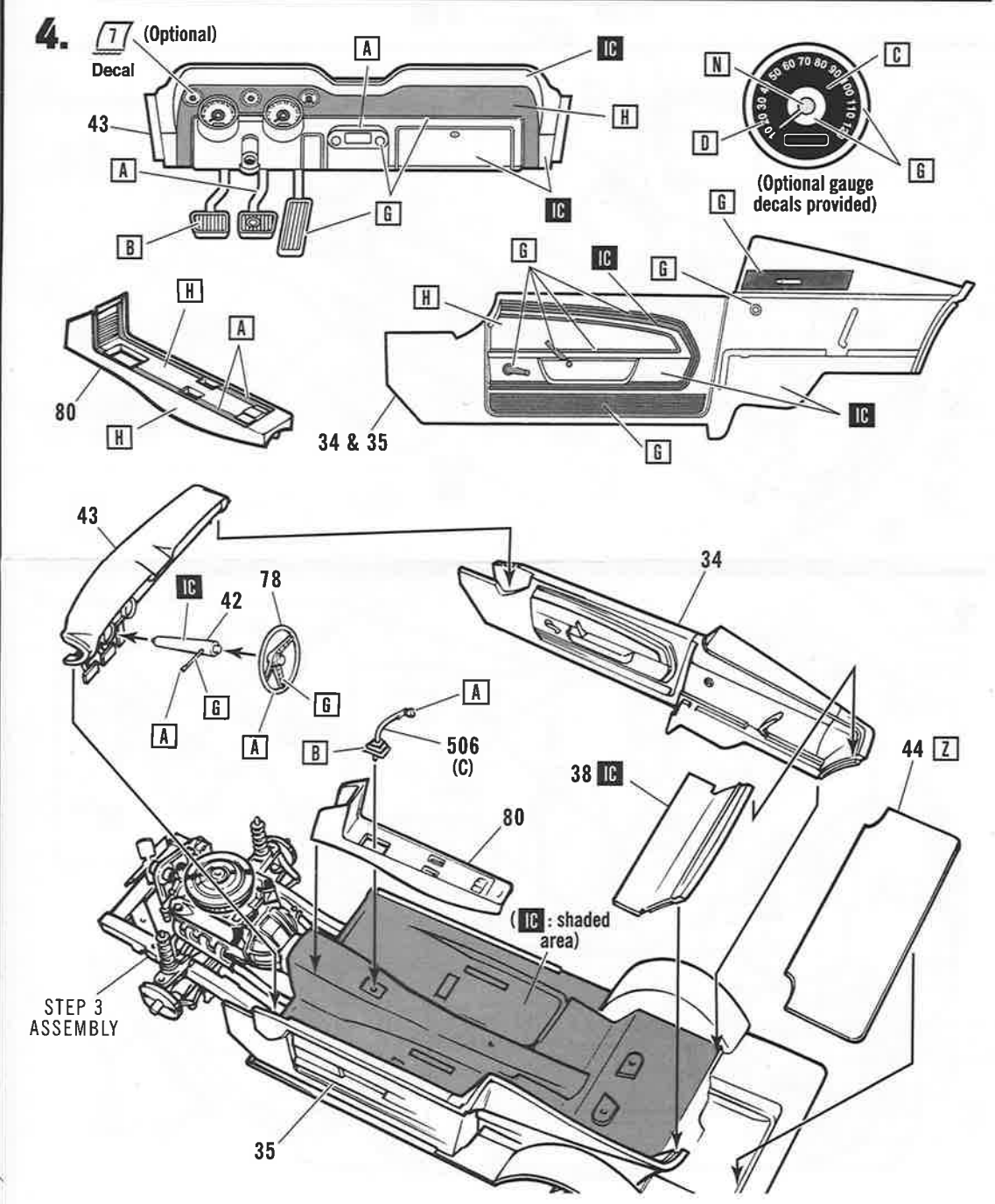

7 (Optional)
Decal
A
IC
43
H
A
B
G
IC
N
C
D
G
(Optional gauge decals provided)
G
G
IC
G
H
H
A
80
H
34 & 35
IC
G
43
IC
42
78
34
G
G
A
A
A
B
506
(C)
38 IC
44 Z
80
(IC : shaded area)
STEP 3 ASSEMBLY
35

5.

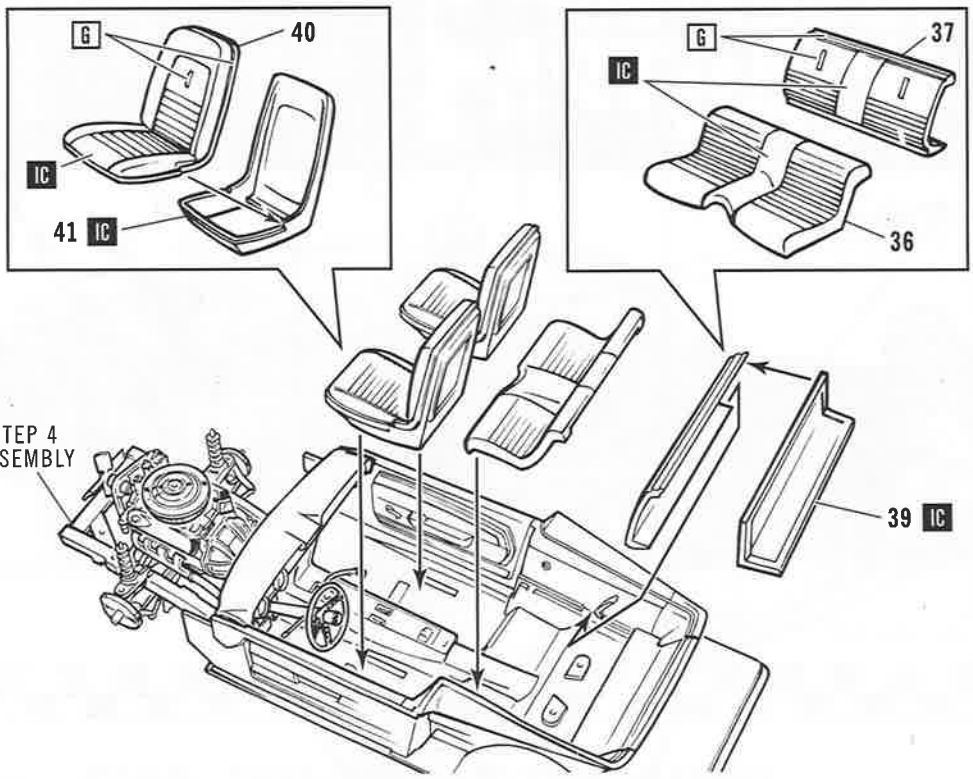
G
40
IC
41 IC
G
37
IC
36
STEP 4
ASSEMBLY
39 IC

6.

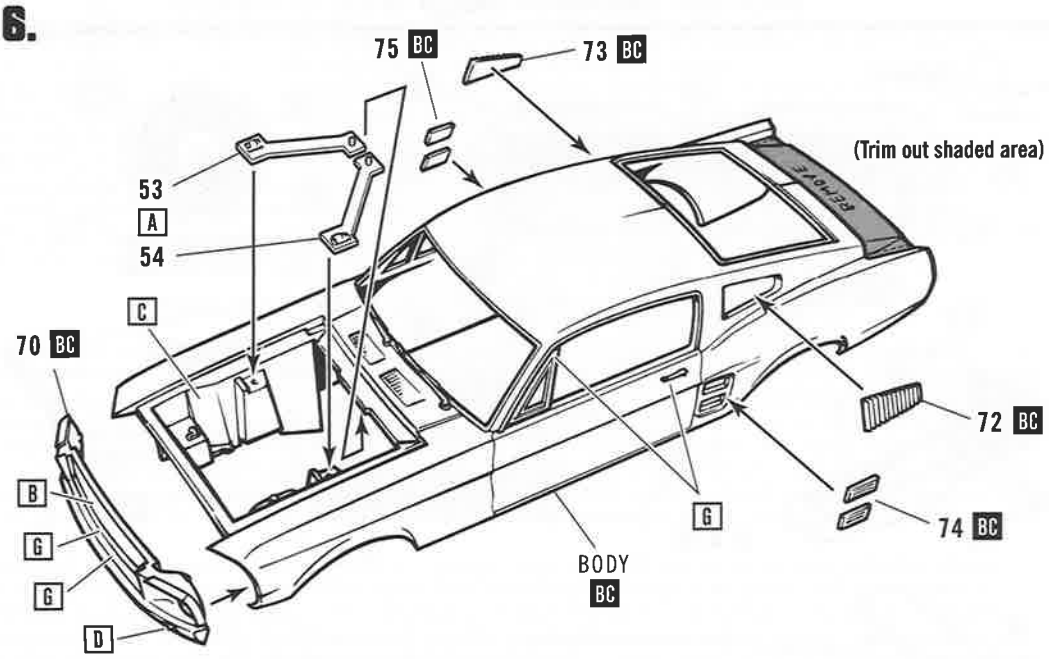
75 BC
73 BC
(Trim out shaded area)
53
A
54
C
70 BC
72 BC
B
G
G
G
74 BC
BODY
BC
D

7.

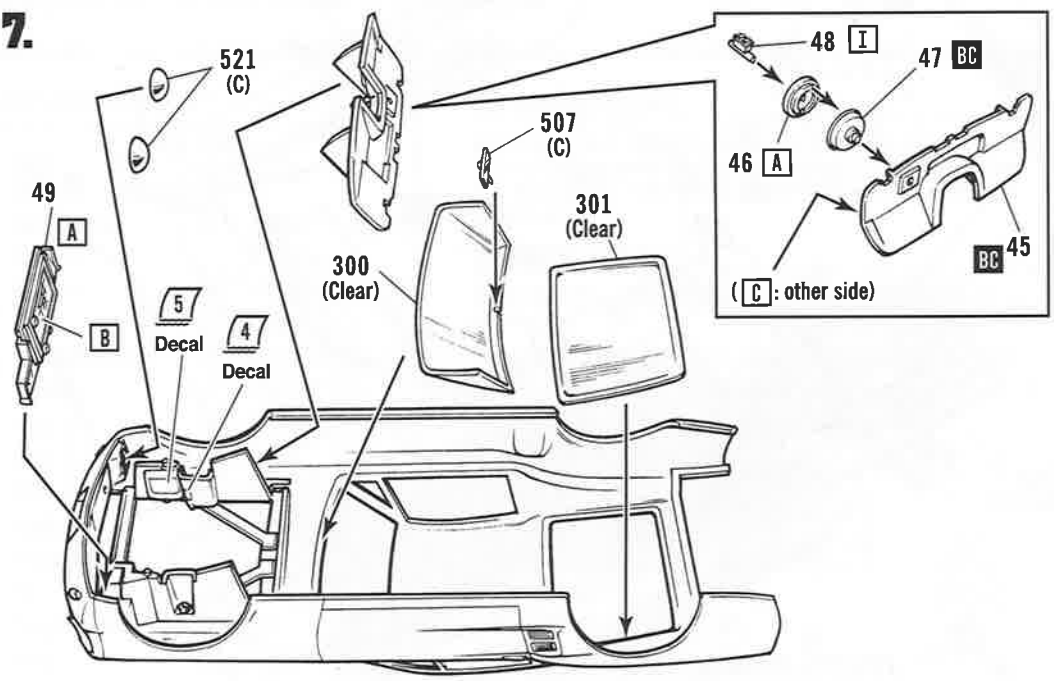
521
(C)
48 I
47 BC
507
(C)
46 A
49
A
301
(Clear)
300
(Clear)
BC 45
B
5
Decal
4
Decal
(C : other side)

8.

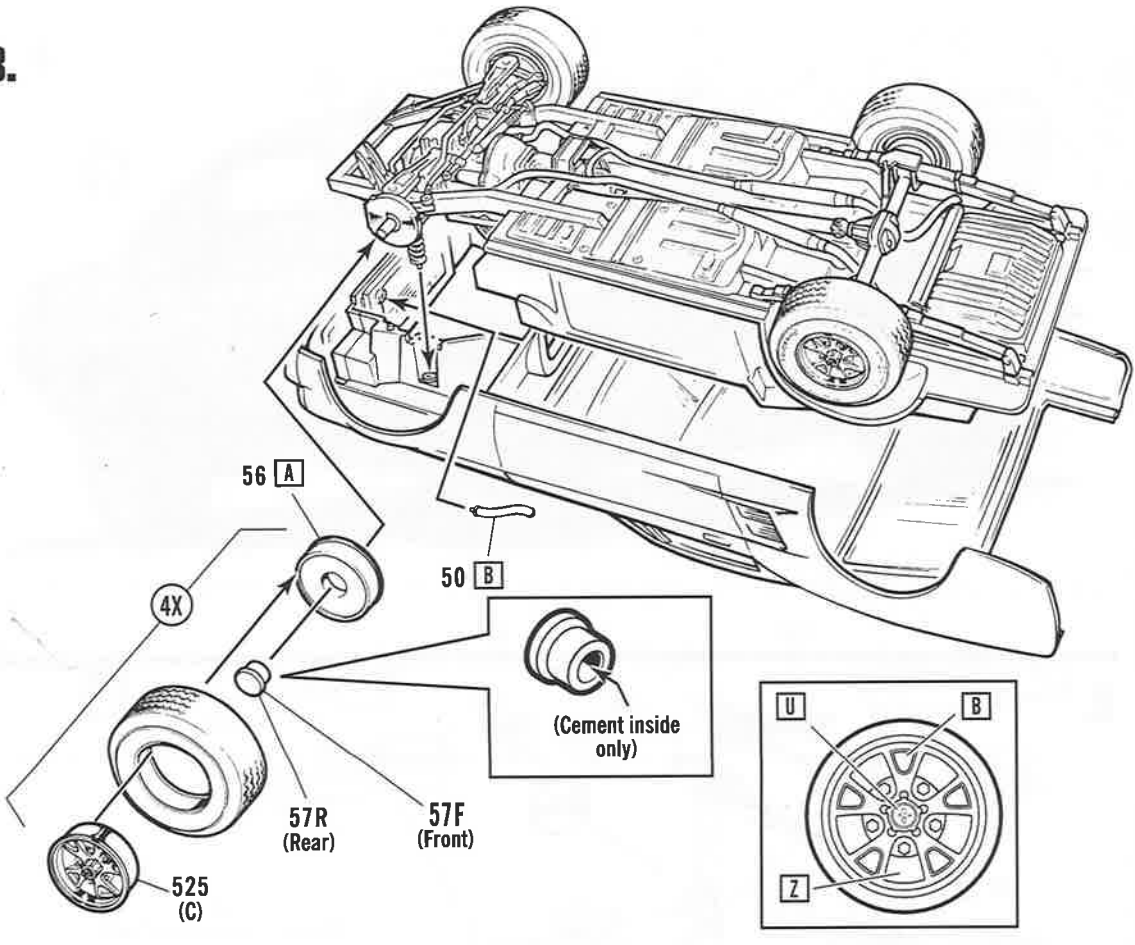
56 A
4X
50 B
(Cement inside only)
U
B
Z
57R (Rear)
57F (Front)
525 (C)

9.

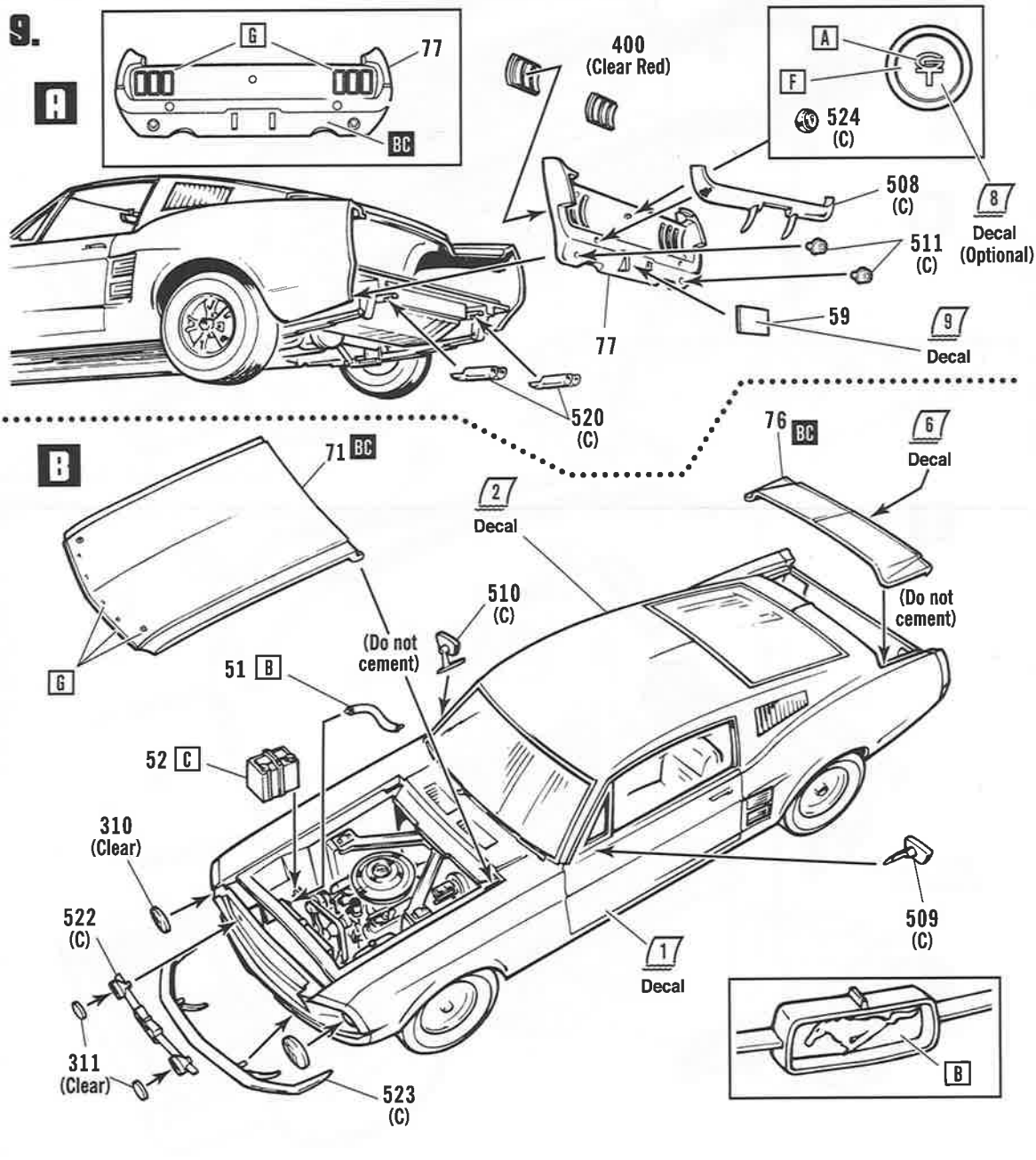
A
G
77
BC
400 (Clear Red)
A
F
524 (C)
508 (C)
8 Decal (Optional)
511 (C)
59
9 Decal
77
520 (C)
B
71 BC
76 BC
6 Decal
2 Decal
510 (C)
(Do not cement)
(Do not cement)
G
51 B
52 C
310 (Clear)
522 (C)
509 (C)
1 Decal
311 (Clear)
523 (C)
B