Abbreviations

	CCS	Countersunk Cap Screw
	CS	Cap Screw
	FCS	Flathead Cap Screw
	BCS	Buttonhead Cap Screw
	CM	Countersunk Machine Screw
	RM	Roundhead Machine Screw
	WM	Washerhead Machine Screw
	SS	Shoulder Screw
	CST	Countersunk Self-tapping Screw
	RST	Roundhead Self-tapping Screw
	WST	Washerhead Self-tapping Screw
	FN	Flange Nut
	NL	Nylon Locknut
	PB	Plastic Bushing
	GS	Set (Grub) Screw
	PW	Plastic Washer
	AS	Aluminum Spacer
	TW	Teflon Washer
	MW	Metal Washer
	E	E-Clip
	SW	Split Washer
	BB	Ball Bearing
	OB	Oilite Bushing
	NRB	Needle Roller Bearing
	ELW	External Lock Washer

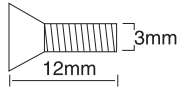

3x12mm Countersunk Machine Screw

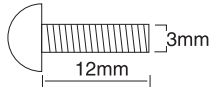

3x12mm Roundhead Machine Screw

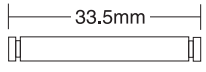

33.5mm Hinge Pin

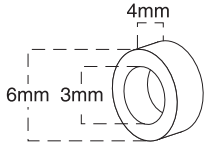

3x6x4mm Spacer

18.5 MM Yoke Pin

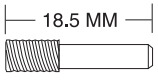

M4/18.5

4mm Thread

Total Length

Driveshafts

Center Front Driveshaft Assembly

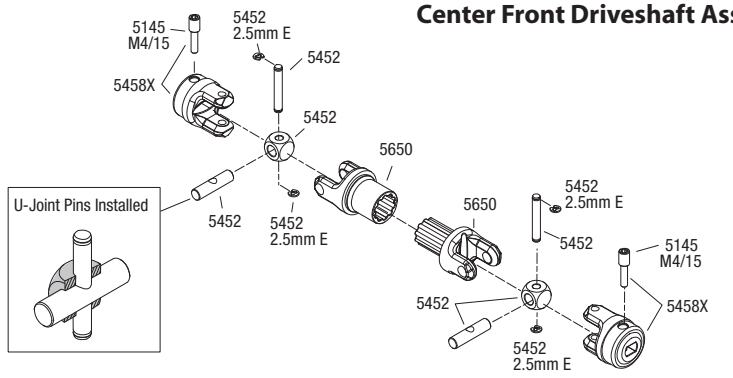

Center Rear Driveshaft Assembly

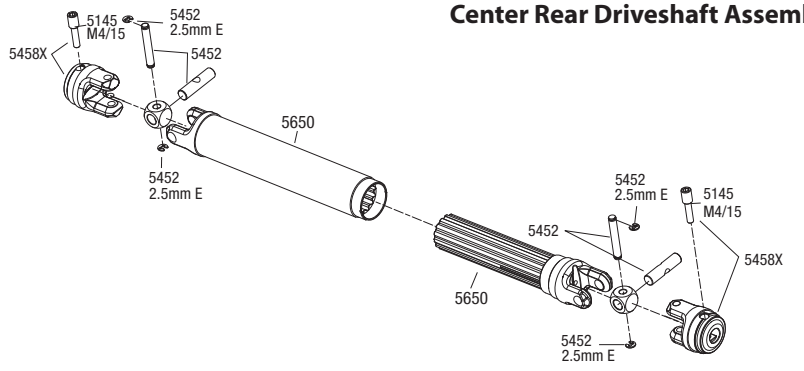

Axle Driveshaft Assembly

Available fully assembled as part #5451X

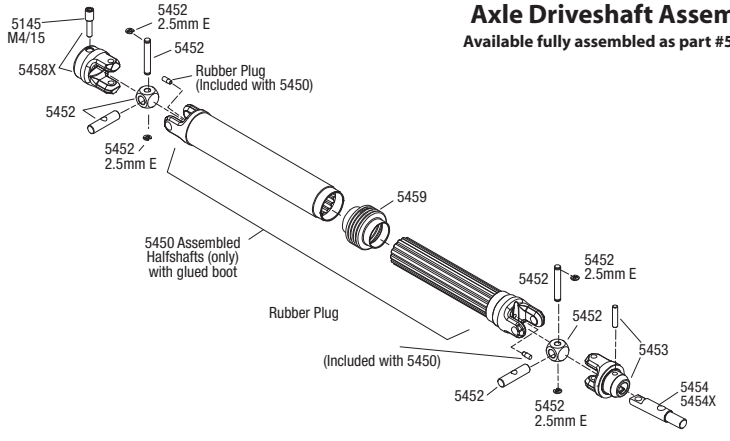

Specifications on this page are subject to change without notice. Some parts listed are optional accessories. Every attempt has been made to ensure the accuracy of this drawing, however Traxxas cannot be held responsible for typographical or other errors.