Parts Breakdown

ITEM 58302

Enzo Ferrari
ENZO FERRARI

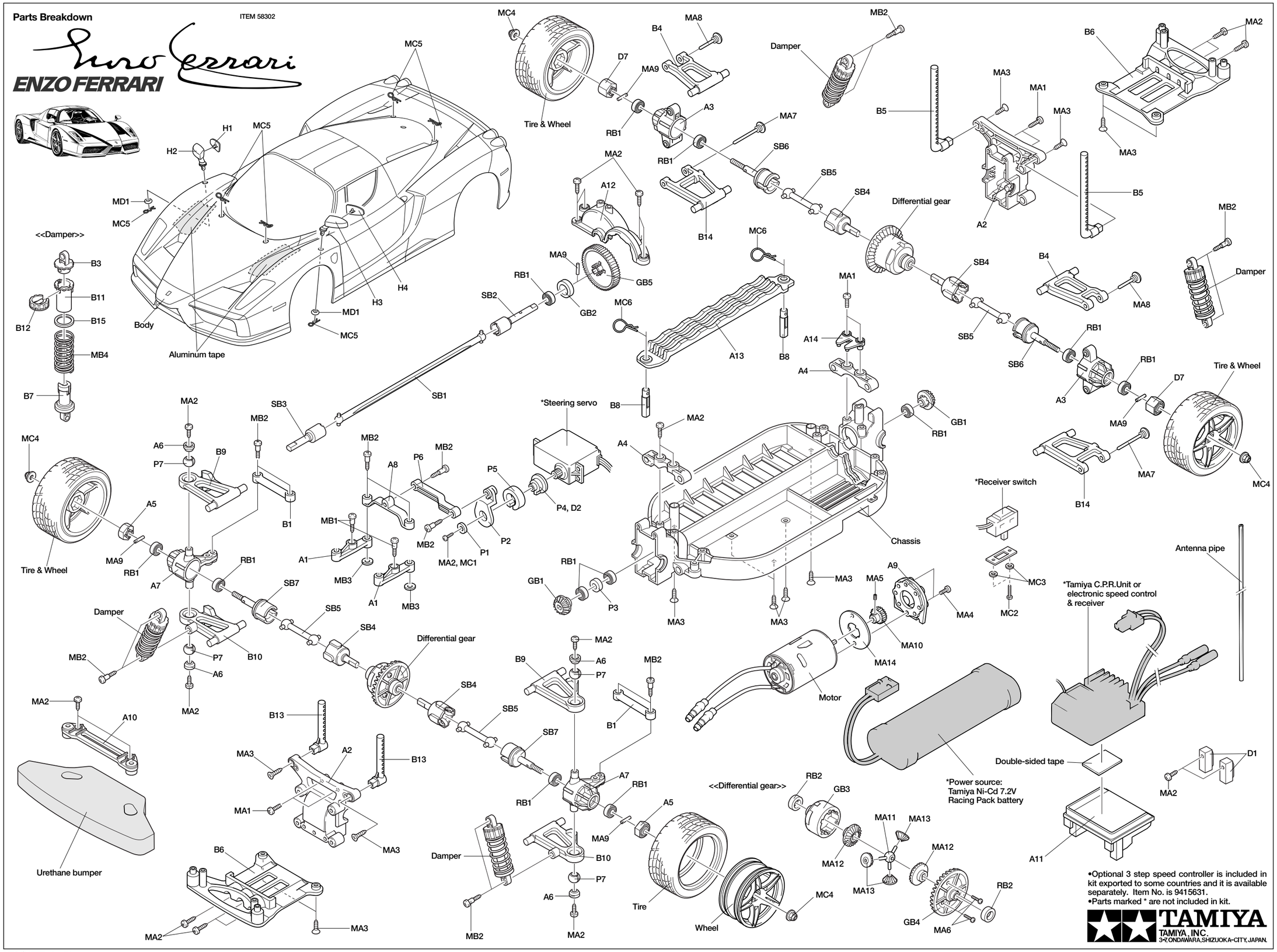

0503 © 2003 TAMIYA