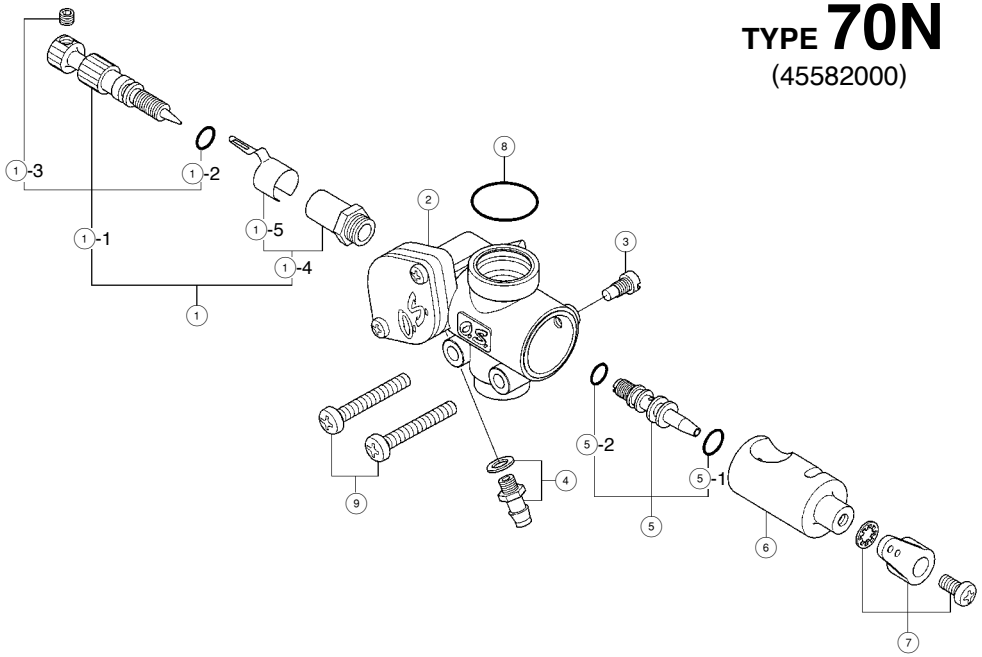

TYPE 70N

(45582000)

For FS-120SⅢ

No.	Code No.	Description
1	2 7381 900	Needle Valve Assembly
1-1	2 9081 952	Needle
1-2	2 4981 837	"O" Ring
1-3	2 6381 501	Set Screw
1-4	2 7381 940	Needle Valve Holder
1-5	2 6711 305	Ratchet Spring
2	4 5582 100	Carburettor Body
3	4 5581 820	Rotor Guide Screw
4	2 2681 953	Fuel Inlet
5	4 5582 300	Mixture Control Valve
5-1	4 6066 319	"O" Ring(L)
5-2	2 4881 824	"O" Ring(S)
6	4 5582 200	Carburettor Rotor
7	2 7881 400	Throttle Lever Assembly
8	4 6115 000	Carburettor Rubber Gasket
9	4 5581 700	Carburettor Fixing Screw