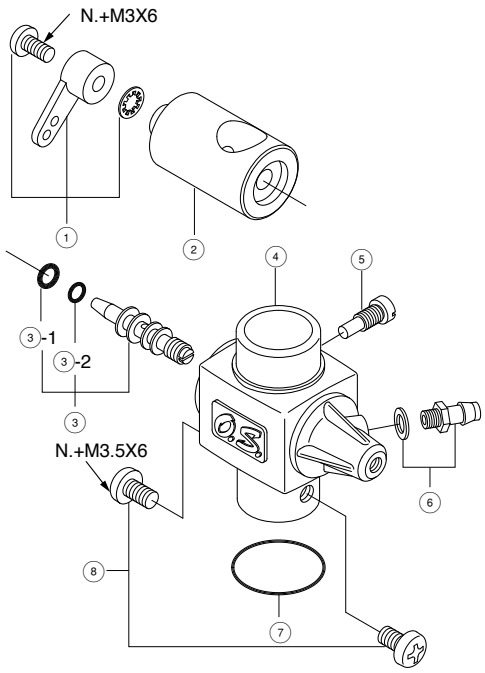

TYPE 60F

(29581000)

For 91FXRING

No.	Code No.	Description
1	2 7881 400	Throttle Lever Assembly
2	2 9581 200	Carburettor Rotor
3	4 5582 300	Mixture Control Valve Assembly
3-1	4 6066 319	"O" Ring(L)
3-2	2 4881 824	"O" Ring(S)
4	2 9581 100	Carburettor Body
5	4 5581 820	Roter Guide Screw
6	2 2681 953	Fuel Inlet
7	2 9015 019	Carburettor Gasket
8	2 5081 700	Carburettor Fixing Screw(2pcs.)

✻ Type of screw

C...Cap Screw B...Binding Head Screw M...Oval Fillister-head Screw F...Flat Head Screw N...Round Head Screw S...Set Screw