TYPE 60J
(26581000)

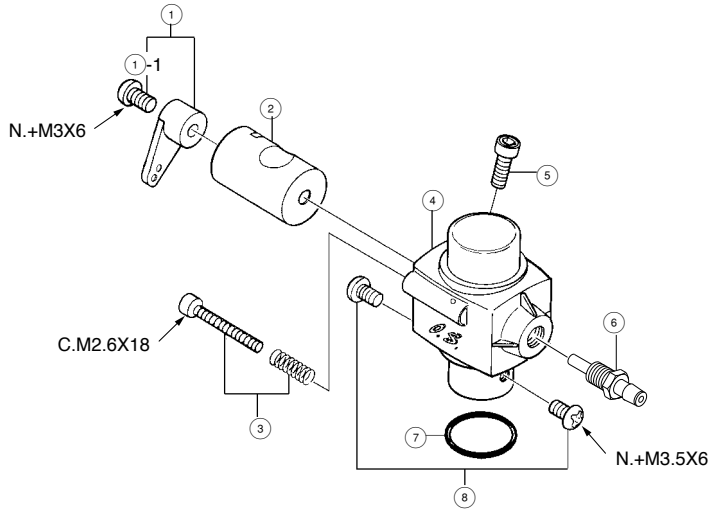

✻ Type of screw

C...Cap Screw B...Binding Head Screw M...Oval Fillister-head Screw F...Flat Head Screw N...Round Head Screw S...Set Screw

For 65LA

No.	Code No.	Description
1	2 2081 408	Throttle Lever Assembly
1-1	2 2081 313	Throttle Lever Fixing Screw
2	2 6581 200	Carburettor Rotor
3	2 6029 500	Air-bleed Screw
4	2 6581 100	Carburettor Body
5	2 2826 131	Throttle Stop Screw
6	2 6029 430	Nozzle For Remote Needle Valve
7	4 6215 000	Carburettor Rubber Gasket
8	2 5081 700	Carburettor Fixing Screw