TYPE 10G (21783000) TYPE 20H (22581000)

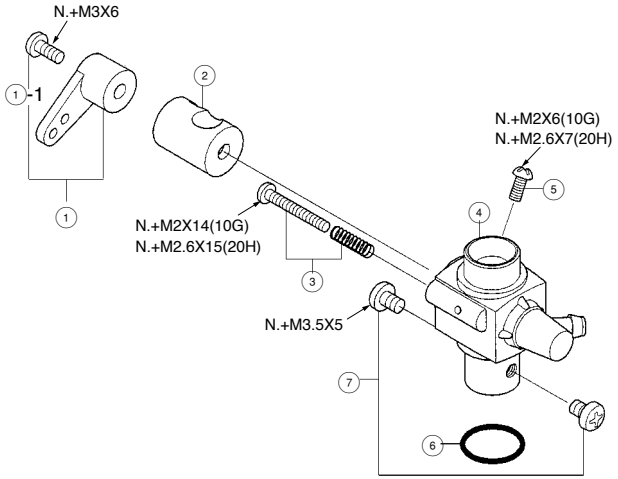

✻ Type of screw

C...Cap Screw B...Binding Head Screw M...Oval Fillister-head Screw F...Flat Head Screw N...Round Head Screw S...Set Screw

For TYPE 10G(For 15LA) TYPE 20H(For 25LA)

No.	Code No.		Description
	10G	20H	
1	2 2081 408		Throttle Lever Assembly
1-1	2 2081 313		Throttle Lever Fixing Screw
2	2 1781 200	2 2381 200	Carburettor Rotor
3	2 1783 600	2 4081 600	Air-Bleed Screw
4	2 1783 100	———	Carburettor Body
	———	2 2581 100	
5	2 1783 300	2 2581 300	Throttle Stop Screw
6	2 1015 001	2 2615 000	Carburettor Gasket
7	2 3081 706		Carburettor Fixing Screw